BIDDING DOCUMENT

For

THE PROCUREMENT OF

Building Construction of Secondary School (Ward No.05)

National Competitive Bidding (NCB)

Single-Stage: Single-Envelope Bidding Procedure

Sunil Smriti Rural Municipality,

Office of Rural Municipal Executive,Sulichaur, Rolpa

Issued on: 23-09-2026 00:00

Issued to: All Eligible Bidders

Invitation for Bids No.: SSRM-ROL-W-NCB-03-2083/084

NCB No.: SSRM-ROL-W-NCB-03-2083/084

Contract Identification No. SSRM-ROL-W-NCB-03-2083/084

Abbreviations

BD ... Bidding Document

BDF ... Bidding Forms

BDS ... Bid Data Sheet

BOQ ... Bill of Quantities

COF ... Contract Forms

DP ... Development Partners

DoLI... Department of Local Infrastructure

e-GP... Electronic Government Procurement

ELI ... Eligibility

EEC... Evaluation and Eligibility Criteria

GCC ... General Conditions of Contract

GoN[1] ... Government of Nepal

ICC ... International Chamber of Commerce

IFB ... Invitation for Bids

ITB ... Instructions to Bidders

JV ... Joint Venture

NCB ... National Competitive Bidding

NRs ... Nepalese Rupees

PAN ... Permanent Account Number

PPA ... Public Procurement Act, 2063

PPMO ... Public Procurement Monitoring Office

PPR ... Public Procurement Regulations, 2064

PS ... Provisional Sum

SBD ... Standard Bidding Document

SCC ... Special Conditions of Contract

TS ... Technical Specifications

VAT ... Value Added Tax

WRQ ... Works Requirements

---

[1] "GoN" word indicates all public entities according to Public Procurement Act, 2063

Table of Contents

Invitation for Bids 1

Part - I Bidding Procedures

Section - I Instructions to Bidders ... ……..3
Section - II Bid Data Sheet……...…….24
Section - III Evaluation and Eligibility Criteria……...……..……..30
Section – IV Bidding Forms……...……....33

Part - II Requirements 44

Section - V Works Requirements ……..…….46
Section - VI Bill of Quantities……..…...…52

Part - III Conditions of Contract and Contract Forms 57

Section - VII General Conditions of Contract……..…61
Section - VIII Special Conditions of Contract…….…....92
Section - IX Contract Forms ……..97

Invitation for Bids

Sunil Smriti Rural Municipality, Office of Rural Municipal Executive, Sulichaur, Rolpa

Invitation for Bids No: SSRM-ROL-W-NCB-03-2083/084

Date of publication: 23-09-2026 00:00

1. Sunil Smriti Rural Municipality, Office of Rural Municipal Executive, Sulichaur Rolpa invites sealed bids from Nepalese eligible bidders for the construction of **Building Construction of Secondary School (Ward No.05)** under National Competitive Bidding procedures. The estimated amount for the works is NRS.10,743,243.02 (without VAT & Contingency but including PS).
2. Eligible Bidders may obtain further information and inspect the Bidding Documents at the office of Sunil Smriti Rural Municipality,Office of Rural Municipal Executive Sulichaur,Rolpa.
3. A complete set of Bidding Documents may be purchased from the office Sunil Smriti Rural Municipality Sulichaur Rolpa by eligible Bidders on the submission of a written application, along with the copy of company/firm registration certificate, or may be downloaded from an official website https://sunilsmritimun.gov.np/ upon payment of a non-refundable fee of NRs.3,000/- till 13-10-2026 during office hours in the account as specified below. Bank deposit voucher shall be submitted by the bidder at the time of submission of bids.

   Information to deposit the cost of bidding document in Bank:

   Name of the Bank: Global IME Bank Ltd.
   Name of Office: Sunilsmriti Rural Municipality,Office of the Rural Municipal Executive
   Office Code no.:-801055410
   Account no:-8204010000018
   Rajaswa (revenue) Shirshak no. :14249.

4. Pre-bid meeting shall be held at Sunil Smriti Rural Municipality, Office of Rural Municipal Executive, Sulichaur Rolpa, at Time: 01:00 PM, Date: 02-10-2026.
5. Sealed bids must be submitted to the office Sunilsmriti Rural Municipality, Office of The Rural Municipal Executive, sulichaur Rolpa, Lumbini province through hand/courier before 14-10-2026 12:00PM. Bids received after this deadline will be rejected.
6. The bids will be opened in the presence of Bidders' representatives who choose to attend at 14-10-2026 01:00PM at the office of Sunilsmriti Rural Municipality, Office of The Rural Municipal Excutive, sulichaur Rolpa Lumbini Province Nepal. Bids must be valid for a period of 90days from the bid submission deadline and must be accompanied by a bid security amounting to a minimum of NRs 2,91,000.00 which shall be valid for 30 days beyond the validity period of the bid.
7. If the last date of purchasing and /or submission falls on a government holiday, then the next working day shall be considered as the last date. In such case the validity period of the bid and bid security shall remain the same as specified for the original last date of bid submission.

Part - I Bidding Procedures

Table of Clauses

Section-I Instruction to Bidders……3

A. General ……... 3
1. Scope of Bid 3
2. Source of Funds 3
3. Fraud and Corruption 3
4. Eligible Bidders 6
5. Eligible Materials, Equipment and Services 8
B. Contents of Bidding Document 8
6. Sections of Bidding Document 8
7. Clarification of Bidding Document, Site Visit, Pre-Bid Meeting 9
8. Amendment of Bidding Document 10
C. Preparation of Bids 10
9. Cost of Bidding 10
10. Language of Bid 10
11. Documents Comprising the Bid 10
12. Letter of Bid and Schedules 11
13. Bid Prices and Discounts 11
14. Currency of Bid and Payment 11
15. Period of Validity of Bids 12
16. Bid Security 12
17. Format and Signing of Bid 14
D. Submission and Opening of Bids ……..... 14
18. Sealing and Marking of Bids 14
19. Deadline for Submission of Bids 14
20. Late Bids 14
21. Withdrawal and Modification of Bids 15
22. Bid Opening 16
E. Evaluation and Comparison of Bids 17
23. Confidentiality 17
24. Clarification of Bids 17
25. Deviations, Reservations, and Omissions 17
26. Determination of Responsiveness 17
27. Nonconformities, Errors, and Omissions 18
28. Correction of Arithmetical Errors 19
29. Evaluation of Bids 19
30. Comparison of Bids 20
31. Employer's Right to Accept Any Bid, and to Reject Any or All Bids..... 21
F. Award of Contract 21
32. Award Criteria 21
33. Letter of Intent to Award the Contract/ Notification of Award 21
34. Performance Security 22
35. Signing of Contract 22
36. Complaint and Review 22

SECTION– I: Instructions to Bidders

This section specifies the procedures to be followed by Bidders in the preparation and submission of their Bids. Information is also provided on the submission, opening, and evaluation of bids and on the award of contract.

A. General	
1. Scope of Bid	1.1 In connection with the Invitation for Bids indicated in the **Bid Data Sheet (BDS)**, the Employer, as indicated **in the BDS**, issues this Bidding Document for the procurement of Works as specified in Section V (Works Requirements). The name, identification, and number of lots (Contracts) / multiple contracts of the National Competitive Bidding (NCB) are provided **in the BDS.**
	1.2 Throughout this Bidding Document: (a) the term "in writing" means communicated in written form and delivered against receipt through e-GP system or e-mail or fax or courier; (b) except where the context requires otherwise, words indicating the singular also include the plural and words indicating the plural also include the singular; and (c) "day" means calendar day.
2. Source of Funds	2.1 GoN Funded: In accordance with its annual program and budget, approved by the GoN, the implementing agency indicated **in the BDS** plans to apply a portion of the allocated budget to eligible payments under the contract(s) for which this Bidding Document is issued. Or Public Entities' own Resource Funded: In accordance with its annual program and budget, approved by the public entity, the implementing agency indicated **in the BDS** plans to apply a portion of the allocated budget to eligible payments under the contract(s) for which this Bidding Document is issued. Or DP Funded: The GoN has applied for or received financing (hereinafter called "funds") from the Development Partner (hereinafter called "the DP") indicated **in the BDS** toward the cost of the project named in the BDS. The GoN intends to apply a portion of the funds to eligible payments under the contract(s) for which this Bidding Document is issued.
	2.2 DP Funded: Payment by the DP will be made only at the request of the GoN and upon approval by the DP in accordance with the terms and conditions of the financing agreement between the GoN and the DP (hereinafter called the "Loan/Grant Agreement"), and will be subject in all respects to the terms and conditions of that Loan/Grant Agreement. No party other than the GoN shall derive any rights from the Loan Agreement or have any claim to the funds.
3. Fraud and Corruption	3.1 Procuring Entities as well as bidders, suppliers and contractors and their sub-contractors under GoN/DP-financed contracts, shall adhere to the highest standard of ethics during the procurement and execution of such contracts. In pursuance of this; (a) the Employer adopts, for the purposes of this provision, the terms as defined below: (i) "corrupt practice" means the offering, giving, receiving, or soliciting, directly or indirectly, anything of value to influence

improperly the actions of another party;

(ii) "fraudulent practice" means any act or omission, including a misrepresentation, that knowingly or recklessly misleads, or attempts to mislead, a party to obtain a financial or other benefit or to avoid an obligation;

(iii) "coercive practice" means impairing or harming, or threatening to impair or harm, directly or indirectly, any party or the property of the party to influence improperly the actions of a party;

(iv) "collusive practice" means an arrangement between two or more parties designed to achieve an improper purpose, including influencing improperly the actions of another party.

(v) "obstructive practice" means (a) deliberately destroying, falsifying, altering, or concealing of evidence material to an investigation; (b) making false statements to investigators in order to materially impede an investigation; (c) failing to comply with requests to provide information, documents, or records in connection with an investigation; (d) threatening, harassing, or intimidating any party to prevent it from disclosing its knowledge of matters relevant to the investigation or from pursuing the investigation; or (e) materially impeding GoN/DP's contractual rights of audit or access to information; and

(vi) "integrity violation" is any act which violates Anticorruption Policy, including (i) to (v) above and the following: abuse, conflict of interest, violations of GoN/DP sanctions, retaliation against whistleblowers or witnesses, and other violations of Anticorruption Policy, including failure to adhere to the highest ethical standard.

(b) the Employer will reject a proposal for award if it determines that the Bidder recommended for award has, directly or through an agent, engaged in corrupt, fraudulent, collusive, coercive, or obstructive practices or other integrity violations in competing for the contract;

(c) DP will cancel the portion of the financing allocated to a contract if it determines at any time that representative(s) of the GoN or of a beneficiary of DP-financing engaged in corrupt, fraudulent, collusive, or coercive practices or other integrity violations during the procurement or the execution of that contract, without the GoN having taken timely and appropriate action satisfactory to DP to remedy the situation.

(d) DP will impose remedial actions on a firm or an individual, at any time, in accordance with DP's Anticorruption Policy and related Guidelines (as amended from time to time), including declaring ineligible, either indefinitely or for a stated period of time, to participate in DP-financed, -administered, or -supported activities or to benefit from an DP-financed, -administered, or -supported contract, financially or otherwise, if it at any time determines that the firm or individual has, directly or through an agent, engaged in corrupt, fraudulent, collusive, coercive, or obstructive practices or other integrity violations; and

(e) The Contractor shall permit the GoN/DP to inspect the Contractor's accounts and records relating to the performance of the Contractor and to have them audited by auditors appointed by the GoN/DP, if so required

	by the GoN/DP.
	3.2 The Bidder shall not carry out or cause to carry out the following acts with an intention to influence the implementation of the procurement process or the procurement agreement: (a) give or propose improper inducement directly or indirectly, (b) distortion or misrepresentation of facts, (c) engaging in corrupt or fraudulent practice or involving in such act, (d) interference in participation of other competing bidders, (e) coercion or threatening directly or indirectly to cause harm to the person or the property of any person to be involved in the procurement proceedings, (f) collusive practice among bidders before or after submission of bids for distribution of works among bidders or fixing artificial/uncompetitive bid price with an intention to deprive the Employer the benefit of open competitive bid price, (g) contacting the Employer with an intention to influence the Employer with regards to the bids or interference of any kind in examination and evaluation of the bids during the period from the time of opening of the bids until the notification of award of contract.
	3.3 PPMO, on the recommendation of the Procuring Entity may blacklist a Bidder for a period of one (1) to three (3) years for its conduct including on the following grounds and seriousness of the act committed by the bidder: (a) if convicted by a court of law in a criminal offence which disqualifies the Bidder from participating in the contract, (b) if it is established that the contract agreement signed by the Bidder was based on false or misrepresentation of Bidder's qualification information, (c) if it at any time determines that the firm has, directly or through an agent, engaged in corrupt, fraudulent, collusive, coercive, or obstructive practices in competing for, or in executing, a GoN/DP-financed contract. (d) if the successful bidder fails to sign the contract. (e) if the bidder fails to inform or informs after the specified time about the saturation of the maximum number of contracts as per ITB 4.9. (f) a Bidder requests for withdrawal or modification of its bid: (i) after the Bid Submission deadline and during the period of validity specified by the Bidder on the Letter of Bid, in case of electronic submission; (ii) from the period twenty-four hours prior to bid submission deadline up to the period of bid validity specified by the Bidder on the Letter of Bid, in case of hard copy submission. (g) if the bidder does not provide clarifications of its Bid by the date and time set in the Employer's request for clarification pursuant to ITB 24.1. (h) a Bidder changes the prices or substance of the bid while providing information pursuant to ITB 24.1.
	3.4 A bidder declared blacklisted and ineligible by the GoN, Public Procurement Monitoring Office (PPMO), by a competent authority under the prevailing law for failure to repay a loan disbursed by a bank or financial institution, and/or the DP in case of DP funded project, shall be ineligible to bid for a contract

	during the period of time determined by the GoN, PPMO, the competent authority and/or the DP. 3.5 In case of a natural person or firm/institution/company which is already declared blacklisted and ineligible by the GoN, any other new or existing firm/institution/company owned partially or fully by such Natural person or Owner or Board of director of blacklisted firm/institution/company; shall not be eligible bidder.
	3.6 Furthermore, Bidders shall be aware of the provisions of GCC 28.3 and GCC 72.3(j).
4. Eligible Bidders	4.1 A Bidder may be a natural person, private entity, or government - owned entity—subject to ITB 4.5—or any combination of them in the form of a Joint Venture (JV) under an existing agreement, or with the intent to constitute a legally-enforceable joint venture. In the case of a JV: (a) all partners shall be jointly and severally liable for the execution of the Contract in accordance with the Contract terms. Maximum number of JV shall be as specified **in the BDS**. The eligibility criteria requirement of the parties to the JV shall be as specified in Section III Evaluation and Eligibility Criteria, and (b) the JV shall nominate a Representative who shall have the authority to conduct all business for and on behalf of any and all the parties of the JV during the bidding process and, in the event the JV is awarded the Contract, during Contract execution.
	4.2 A Bidder, and all parties constituting the Bidder, shall have the nationality of any country or eligible countries mentioned **in the BDS**. A Bidder shall be deemed to have the nationality of a country if the Bidder is a citizen or is constituted, or incorporated, and operates in conformity with the provisions of the laws of that country. This criterion shall also apply to the determination of the nationality of proposed sub-Contractors or suppliers for any part of the Contract including related services.
	4.3 A Bidder shall not have a conflict of interest. A Bidder found to have a conflict of interest shall be disqualified. if any of, including but not limited to, the following apply: (a) they have controlling partners in common; or (b) they receive or have received any direct or indirect subsidy from any of them; or (c) they have the same legal representative for purposes of this bid; or (d) they have a relationship with each other, directly or through common third parties, that puts them in a position to have access to information about or improperly influence on the Bid of another Bidder, or influence the decisions of the Employer regarding this bidding process; or (e) a Bidder participates in more than one bid in this bidding process either individually or as a partner in a joint venture. This will result in the disqualification of all Bids in which it is involved. However, subject to any finding of a conflict of interest in terms of ITB 4.3 (a)-(d) above, this does not limit the participation of the same subcontractor in more than one bid; or (f) a Bidder or any of its affiliated entity, participated as a consultant in the

	preparation of the design or technical specifications of the works that are the subject of the Bid; or (g) a Bidder was affiliated with a firm or entity that has been hired (or is proposed to be hired) by the Employer as Engineer for the Contract. or (h) a Bidder that has a close business or family relationship with a professional staff of the Procuring Entity.
	4.4 A firm that is under a declaration of ineligibility by the GoN/DP in accordance with ITB 3, at the date of the deadline for bid submission or thereafter, shall be disqualified. A firm shall not be eligible to participate in any procurement activities under an DP-financed, -administered, or -supported project while under temporary suspension or debarment by DP pursuant to the DP's Anticorruption Policy (see ITB 3), whether such debarment was directly imposed by the DP, or enforced by other DPs pursuant to the Agreement for Mutual Enforcement of Debarment Decisions. A bid from a temporary suspended or debarred firm will be rejected.
	4.5 Enterprises owned by Government shall be eligible only if they can establish that they are legally and financially autonomous and operate under commercial law, and that they are not a dependent agency of the GoN.
	4.6 Bidders shall provide such evidence of their continued eligibility satisfactory to the Employer, as the Employer shall reasonably request.
	4.7 Firms shall be excluded in any of the cases, if (a) by an act of compliance with a decision of the United Nations Security Council taken under Chapter VII of the Charter of the United Nations, Nepal prohibits any import of goods or Contracting of works or services from that country or any payments to persons or entities in that country. (b) DP Funded: as a matter of law or official regulation, Nepal prohibits commercial relations with that country, provided that the DP is satisfied that such exclusion does not preclude effective competition for the supply of goods or related services required; (c) DP Funded: a firm has been determined to be ineligible by the DP in relation to their guidelines or appropriate provisions on preventing and combating fraud and corruption in projects financed by them.
	4.8 The Bidder, including all parties constituting the Bidder, shall be ineligible to participate in the open competitive bidding process if it has already secured maximum number of construction contracts (in open competitive bidding) **as specified in BDS** and has not yet completed the work as stipulated in the respective contracts. 4.9 For the purpose of ITB 4.8 above, the bidder shall declare that the bidder, and all parties constituting the Bidder have not already secured maximum number of construction contracts (in open competitive bidding in procurement of works) **as specified in BDS**. If the bidder, and all parties constituting the Bidder has participated in bidding processes of many public entities and during that period the maximum number of contracts have been attained as specified saturates due to issuance of letters of acceptance by a particular public entity, the bidder shall inform in writing to all other concerned public entities, where the bidder have participated in bidding process, within three days of issuance of last letter of acceptance that saturates the maximum number of contracts as

	specified.
5. Eligible Materials, Equipment and Services	5.1 The materials, equipment and services to be supplied under the Contract shall have their origin in any source countries as defined in **the BDS** and all expenditures under the Contract will be limited to such materials, equipment, and services. At the Employer's request, Bidders may be required to provide evidence of the origin of materials, equipment and services.
	5.2 For purposes of ITB 5.1 above, "origin" means the place where the materials and equipment are mined, grown, produced or manufactured, and from which the services are provided. Materials and equipment are produced when, through manufacturing, processing, or substantial or major assembling of components, a commercially recognized product results that differs substantially in its basic characteristics or in purpose or utility from its components.
B. Contents of Bidding Documents	
6. Sections of Bidding Document	6.1 The Bidding Document consist of Parts I, II, and III, which include all the Sections indicated below, and should be read in conjunction with any Addenda issued in accordance with ITB 8. PART I Bidding Procedures Section I Instructions to Bidders (ITB) Section II Bid Data Sheet (BDS) Section III Evaluation and Eligibility Criteria (EEC) Section IV Bidding Forms (BDF) PART II Requirements Section V Works Requirements (WRQ) Section VI Bill of Quantities (BOQ) PART III Conditions of Contract and Contract Forms Section VII General Conditions of Contract (GCC) Section VIII Special Conditions of Contract (SCC) Section IX Contract Forms (COF)
	6.2 The Invitation for Bids (IFB) issued by the Employer is not part of the Bidding Document.
	6.3 The Employer is not responsible for the completeness of the Bidding Document and their Addenda, if they were not obtained directly from the source stated by the Employer in the Invitation for Bids.
	6.4 The Bidder is expected to examine all instructions, forms, terms, and specifications in the Bidding Document and to furnish with its bid all information and documentation as is required by the Bidding Documents. Failure to furnish all information or documentation required by the Bidding Document may result in the rejection of the bid.
7. Clarification of Bidding Document, Site Visit, Pre-Bid Meeting	7.1 A prospective Bidder requiring any clarification of the Bidding Document shall contact the Employer in writing at the Employer's address indicated **in the BDS** or raise any question or curiosity during the pre-bid meeting if provided for in accordance with ITB 7.4. The Employer will respond in writing to any request for clarification, provided that such request is received within the period as mentioned in ITB 7.5. The Employer shall

	forward copies of its response to all Bidders who have acquired the Bidding Document in accordance with ITB 6.3, including description of the inquiry but without identifying its source. Should the Employer deem it necessary to amend the Bidding Document as a result of a request for clarification, it shall do so following the procedure under ITB 8 and ITB 17.2
	7.2 The Bidder is advised to visit and examine the Site of Works and its surroundings and obtain for itself, on its own risk and responsibility, all information that may be necessary for preparing the bid and entering into a Contract for construction of the Works. The costs of visiting the Site shall be at the Bidder's own expense.
	7.3 The Bidder and any of its personnel or agents will be granted permission by the Employer to enter upon its premises and lands for the purpose of such visit, but only upon the express condition that the Bidder, its personnel, and agents will release and indemnify the Employer and its personnel and agents from and against all liability in respect thereof, and will be responsible for death or personal injury, loss of or damage to property, and any other loss, damage, costs, and expenses incurred as a result of the inspection.
	7.4 The Bidder's designated representative is invited to attend a pre-bid meeting, if provided for **in the BDS.** The purpose of the meeting will be to clarify issues and to answer questions on any matter that may be raised at that stage. 7.5 The Bidder is requested, as far as possible, to submit any questions in writing, to reach the Employer as mentioned **in BDS**.
	7.5 The Bidder is requested, to submit any questions in writing, to reach the Employer as mentioned **in BDS**.
	7.6 Minutes of the pre-bid meeting, including the text of the questions raised, without identifying the source, and the responses given, together with any responses prepared after the meeting, will be transmitted promptly to all Bidders who have acquired the Bidding Document in accordance with ITB 6.3. Any modification to the Bidding Document that may become necessary as a result of the pre-bid meeting shall be made by the Employer exclusively through the issue of an addendum pursuant to ITB 8 and not through the minutes of the pre-bid meeting.
	7.7 Nonattendance at the pre-bid meeting will not be a cause for disqualification of a Bidder.
8. Amendment of Bidding Document	8.1 At any time prior to the deadline for submission of bids, the Employer may amend the Bidding Document by issuing addendum or several addenda.
	8.2 Any addendum issued shall be part of the Bidding Document and shall be communicated in writing to all who have obtained the Bidding Document from the Employer in accordance with ITB 6.3.
	8.3 To give prospective Bidders reasonable time in which to take an addendum into account in preparing their bids, the Employer may, at its discretion, extend the deadline for the submission of bids, pursuant to ITB 19.2. However, the time available to submit bids shall not be less than five (5) days since amendment in bidding document.
C. Preparation of Bids	
9. Cost of Bidding	9.1 The Bidder shall bear all costs associated with the preparation and submission of its Bid, and the Employer shall in no case be responsible or liable for those costs, regardless of the conduct or outcome of the bidding process.

10. Language of Bid	10.1 The Bid, as well as all correspondence and documents relating to the bid exchanged by the Bidder and the Employer, shall be written in the language specified **in the BDS**. Supporting documents and printed literature that are part of the Bid may be in another language provided they are accompanied by an accurate translation of the relevant passages in the language specified **in the BDS**, in which case, for purposes of interpretation of the Bid, such translation shall govern.
11. Documents Comprising the Bid	11.1 The Bid shall comprise the following: (a) Letter of Bid; (b) completed Bill of Quantities (BoQ), in accordance with ITB 12 and ITB 13, or as stipulated **in the BDS**; (c) Bid Security, in accordance with ITB 16; (d) written confirmation authorizing the signatory of the Bid to commit the Bidder, in accordance with ITB 17.2; (e) documentary evidence of establishing the Bidder's eligibility; (f) Bids submitted by a Joint Venture shall include a copy of the Joint Venture Agreement entered into by all partners. Alternatively, a Letter of Intent to execute a Joint Venture Agreement in the event of a successful Bid shall be signed by all partners and submitted with the Bid, together with a copy of the proposed agreement. The Joint Venture agreement, or letter of intent to enter into a Joint Venture including a draft agreement shall indicate at least the parts of the Works to be executed by the respective partners; (g) Table of Price Adjustment (if applicable); and (h) any other required documents required, in the **BDS**.
	11.2 The Bidder is solely responsible for the authenticity of the submitted documents.
12. Letter of Bid and Schedules	12.1 The Letter of Bid, Schedules, and all documents listed under ITB 11, shall be prepared using the relevant forms in Section IV (Bidding Forms) and in Section VI (Bill of Quantities).The forms must be completed without any alterations to the text, and no substitutes shall be accepted. All blank spaces shall be filled in with the information requested.
13. Bid Prices and Discounts	13.1 The prices and discounts quoted by the Bidder in the Letter of Bid and in the Schedules shall conform to the requirements specified below.
	13.2 The Bidder shall submit a bid for the whole of the works described in ITB 1.1 by filling in prices for all items of the Works, as identified in Section VI (Bill of Quantities). In case of Unit Rate Contracts, the Bidder shall fill in rates and prices for all items of the Works described in the Bill of Quantities. Items against which no rate or price is entered by the Bidder will not be paid for by the Employer when executed and shall be deemed covered by the rates for other items and prices in the Bill of Quantities.
	13.3 The price to be quoted in the Letter of Bid shall be the total price of the Bid, excluding any discounts offered. Absence of the total price in the Letter of Bid may result in rejection of the Bid.
	13.4 The Bidder shall quote any discounts and the methodology for their application in the Letter of Bid, in accordance with ITB 12.1.
	13.5 If so indicated in ITB 1.1 and ITB 29.4, bids are invited for individual

	Contracts or for any combination of Contracts (packages). Bidders wishing to offer any price reduction for the award of more than one Contract shall specify in their bid the price reductions applicable to each package, or alternatively, to individual Contracts within the package. Price reductions or discounts shall be submitted in accordance with ITB 13.4, provided the bids for all Contracts are submitted and opened at the same time.
	13.6 Unless otherwise provided **in the BDS** and the Conditions of Contract, the prices quoted by the Bidder shall be fixed. If the prices quoted by the Bidder are subject to adjustment during the performance of the Contract in accordance with the provisions of the Conditions of Contract, the Bidder shall furnish the indices and weightings for the price adjustment formulae in the Table of Adjustment Data in Section IV (Bidding Forms) and the Employer may require the Bidder to justify its proposed indices and weightings.
	13.7All duties, taxes, and other levies payable by the Contractor under the Contract, or for any other cause, as of the date 30 days prior to the deadline for submission of bids, shall be included in the rates and prices and the total bid price submitted by the Bidder.
14. Currency of Bid and Payment	14.1 The currency of the bid and payment shall be in Nepalese Rupees.
15. Period of Validity of Bids	15.1 Bids shall remain valid for the period specified **in the BDS.** The bid validity period shall start from the bid submission deadline as prescribed by the Employer in accordance with ITB 19.1. If the prescribed bid submission deadline date falls on a government holiday, then the next working day shall be considered as the bid submission deadline date. In such case the validity period of the bids shall be considered from the original bid submission deadline date. In the case of electronic bid submission, if any technical issue arises in the handling of the e-GP system, the PPMO may extend the deadline for bid submission. However, the validity period of the bids shall still be counted from the original bid submission deadline. A bid valid for a shorter period shall be rejected by the Employer as nonresponsive.
	15.2 In exceptional circumstances, prior to the expiration of the bid validity period, the Employer may request Bidders to extend the period of validity of their Bids. The request and the responses shall be made in writing. If a bid security is requested in accordance with ITB 16, it shall also be extended 30 days beyond the deadline of the extended validity period. A Bidder may refuse the request without forfeiting its bid security. A Bidder granting the request shall not be required or permitted to modify its bid and to include any additional conditions against the provisions specified in Bid Documents.
16. Bid Security	16.1 The Bidder shall furnish as part of its bid, in original form, a bid security as specified **in the BDS.** In case of e-submission of bid, the Bidder shall upload scanned copy of Bid security letter at the time of electronic submission of the bid. The Bidder accepts that the scanned copy of the Bid security shall, for all purposes, be equal to the original. The details of original Bid Security and the scanned copy submitted with e-bid should be the same otherwise the bid shall be non-responsive.

	16.2 The bid security shall be, at the Bidder's option, in any of the following forms: (a) an unconditional bank guarantee from Commercial Bank or Financial Institution eligible to issue Bank Guarantee as per prevailing Law or; (b) a cash deposit voucher in the Employer's Account as specified **in BDS**. In the case of a bank guarantee, the bid security shall be submitted either using the Bid Security Form included in Section IV (Bidding Forms) or in another Form acceptable to the employer. The form must include the complete name of the Bidder. The bid security shall be valid for minimum thirty (30) days beyond the original validity period of the bid, or beyond any period of extension if requested under ITB 15.2. A bid security valid for a shorter period shall be rejected by the Employer as nonresponsive.
	16.3 Any bid not accompanied by an enforceable and substantially compliant bid security shall be rejected by the Employer as nonresponsive. In case of e-Submission, if the scanned copy of an acceptable Bid Security letter is not uploaded with the electronic Bid, then Bid shall be rejected.
	16.4 The public entity shall return the bid securities except those that are to be forfeited as per ITB 16.5 to the respective bidders within three (3) days after the successful bidder has furnished the required performance security and signed the Contract Agreement pursuant, to ITB 34.1 and ITB 35.1.
	16.5 The bid security shall be forfeited if: (a) a Bidder requests for withdrawal or modification of its bid, except as provided in ITB 15.2: (i) during the period of bid validity specified by the Bidder on the Bid, in case of electronic submission; (ii) from the period twenty-four hours prior to bid submission deadline up to the period of bid validity specified by the Bidder on the Letter of Bid, in case of hard copy submission. (b) a Bidder changes the prices or substance of the bid while providing information pursuant to ITB 24.1; (c) a Bidder involves in fraud and corruption pursuant to ITB 3.1; (d) the successful Bidder fails to: (i) furnish a performance security in accordance with ITB 29.5, ITB 29.8 and ITB 34.1; or (ii) sign the Contract in accordance with ITB 35.1 or (iii) accept the correction of arithmetical errors pursuant to ITB 28.1; (e) if the bidder fails to inform about the saturation of the maximum number of contracts as per ITB 4.9.
	16.6 The Bid Security of a JV shall be in the name of the JV that submits the bid. If the JV has not been legally constituted at the time of bidding, the Bid Security shall be in the names of all future partners as named in the letter of intent mentioned in ITB 4.1.
17. Format and Signing of Bid	17.1 The Bidder shall prepare one original of the documents comprising the bid as described in ITB 11 and clearly mark it ORIGINAL". In addition, the Bidder shall submit copies of the bid in the number specified **in the BDS**, and clearly mark each of them "COPY." In the event of any discrepancy

	between the original and the copies, the original shall prevail. In case of e-submission of bid, the Bidder shall submit his bid electronically in PDF or web forms files as specified in ITB Clause 18.1(b),
	17.2 The original and all copies of the bid shall be typed or written in indelible ink and shall be signed by a person duly authorized to sign on behalf of the Bidder. This authorization shall consist of a written confirmation as specified **in the BDS** and shall be attached to the bid. The name and position held by each person signing the authorization must be typed or printed below the signature. All pages of the bid, except for un amended printed literature, shall be signed or initialed by the person signing the bid.
	17.3 Any amendments such as interlineations, erasures, or overwriting shall be valid only if they are signed or initialed by the person signing the bid.
D. Submission and Opening of Bids	
18. Sealing and Marking of Bids	18.1 Unless otherwise specified **in BDS**, Bidders shall submit their bids by electronic or by mail/by hand/by courier. Procedures for submission, sealing and marking are as follows: (a) Bidders submitting bids by mail, by hand or by courier i. Bidders shall enclose the original and each copy of the Bid. These envelopes containing the original and the copies shall then be enclosed in one single envelope. ii. The inner and outer envelopes shall: (aa) bear the name and address of the Bidder; (bb) be addressed to the Employer as provided **in BDS**19.1; (cc)bear the specific identification of this bidding process indicated **in BDS** 1.1; and (dd) bear a warning not to open before the time and date for bid opening. iii. If all envelopes are not sealed and marked as required, the Employer will assume no responsibility for the misplacement or premature opening of the bid. (b) Bidders submitting Bids electronically shall follow the electronic bid submission procedure specified **in BDS**.
19. Deadline for Submission of Bids	19.1 Bids must be received by the Employer at the address and no later than the date and time indicated **in the BDS**. In case of e-submission, the standard time for e-submission is Nepalese Standard Time as set out in the server. The e-procurement system will accept the e-submission of bid from the date of publishing of notice and will automatically not allow the e-submission of bid after the deadline for submission of bid.
	19.2 The Employer may, at its discretion, extend the deadline for the submission of bids by amending the Bidding Document in accordance with ITB 8, in which case all rights and obligations of the Employer and Bidders previously subject to the deadline shall thereafter be subject to the deadline as extended.
20. Late Bids	20.1 The Employer shall not consider any bid that arrives after the deadline for submission of bids, in accordance with ITB 19. Any bid received by the Employer after the deadline for submission of bids shall be declared late, rejected, and returned unopened to the Bidder.
21. Withdrawal, and	21.1 A Bidder may withdraw, or modify its bid after it has been submitted

Modification of Bids	either in hard copy or by e-submission. Procedures for withdrawal or modification of submitted bids are as follows: (i) Bids submitted in hard Copy a) Bidders may withdraw or modify its bids by sending a written notice in a sealed envelope, duly signed by an authorized representative, and shall include a copy of the authorization in accordance with ITB 17.2 before 24 hours prior to the last deadline of submission of bid. The corresponding modification of the bid must accompany the respective written notice. All notices must be: (aa) prepared and submitted in accordance with ITB 17 and ITB 18, and in addition, the respective envelopes shall be clearly marked "WITHDRAWAL", "MODIFICATION;" and (bb) received by the Employer twenty-four hour prior to the deadline prescribed for submission of bids, in accordance with ITB 19. ii) E-submitted bids. a) Bidder may submit modification or withdrawal prior to the deadline prescribed for submission of bids through e-GP system by using the forms and instructions provided by the system.
	21.2. Bids requested to be withdrawn in accordance with ITB 21.1 shall not be opened. In case of hard copy submission, the Bid will be returned unopened to the Bidders.
	21.3 Except in case of any modification or correction in bid document made by procuring entity, Bidder may submit request for withdrawal or modification only one time. 21.4 In case of hard copy bid, no bid may be withdrawn if the bid has already been modified; except in case of any modification or correction in bid document by procuring entity.
	21.5 Request for withdrawal or modification must be made through the same medium of submission. Request for withdrawal or modifications through different medium shall not be considered.
	21.6 The following provisions apply for withdrawal or modification of the Bids: (i) In case of bids submitted in hard copy no bid shall be withdrawn or modified in the interval between 24 hours prior to the deadline for submission of bids and the expiration of the period of bid validity specified by the Bidder on the Letter of Bid or any extension thereof. (ii) In case of e-submitted bids no bids shall be withdrawn or modified in the interval between deadline for submission of bids and the expiration of the period of bid validity specified by the Bidder on the Letter of Bid or any extension thereof.
	21.7 Once a Bid is withdrawn, bidder will not be able to submit another bid for the same bid.
22. Bid Opening	22.1 The Employer shall open the bids in public at the address, date and time specified **in the BDS** in the presence of Bidders` designated representatives who choose to attend.
	22.2 The Employer shall download the e-submitted bid files. The e-GP system allows the Employer to download the e-submitted bid files (report) only after

	bid opening date and time after login simultaneously by two members of the Bid opening committee.
	22.3 Electronically submitted bid shall be opened at first in the same time and date as specified above. Electronic Bids shall be opened one by one and read out. The e-submitted bids must be readable through open standards interfaces. Unreadable and or partially submitted bid files shall be considered incomplete.
	22.4 Thereafter, envelopes marked "WITHDRAWAL" shall be opened and read out and the envelope with the corresponding bid shall not be opened, but returned to the Bidder. No bid withdrawal shall be Permitted unless the corresponding withdrawal notice contains a valid authorization to request the withdrawal and is read out at bid opening. Next, envelopes marked "MODIFICATION" shall be opened and read out with the corresponding bid. No bid modification shall be permitted unless the corresponding modification notice contains a valid authorization to request the modification and is read out at bid opening. Only envelopes that are opened and read out at bid opening shall be considered further.
	22.5 All other envelopes shall be opened one at a time, reading out: the name of the Bidder; the Bid Price(s), including any discounts and alternative bids and indicating whether there is a modification; the presence of a bid security and any other details as the Employer may consider appropriate. Only discounts and alternative offers read out at bid opening shall be considered for evaluation. No bid shall be rejected at bid opening except for late bids, in accordance with ITB 20.1.
	22.6 The Employer shall prepare a record of the bid opening that shall include, as a minimum: the name of the Bidder and whether there is a withdrawal, or modification; the Bid Price, per Contract if applicable, including any discounts and alternative offers; and the presence or absence of a bid security. The Bidders' representatives who are present shall be requested to sign the record. The omission of a Bidder's signature on the record shall not invalidate the contents and effect of the record.
E. Evaluation and Comparison of Bids	
23. Confidentiality	23.1 Information relating to the examination, evaluation, comparison, and recommendation of Contract award, shall not be disclosed to Bidders or any other persons not officially concerned with such process until information on Contract award is communicated to all Bidders.
	23.2 Any attempt by a Bidder to influence the Employer in the evaluation of the bids or Contract award decisions may result in the rejection of its bid.
	23.3 Notwithstanding ITB 23.2, from the time of bid opening to the time of Contract award, if any Bidder wishes to contact the Employer on any matter related to the bidding process, it may do so in writing.
24. Clarification of Bids	24.1 To assist in the examination, evaluation, and comparison of the bids, the Employer may, at its discretion, ask any Bidder for a clarification of its bid. Any clarification submitted by a Bidder that is not in response to a request by the Employer shall not be considered. The Employer's request for clarification and the response shall be in writing. No change in the prices or substance of the bid shall be sought, offered, or permitted, except to confirm the correction of arithmetic errors discovered by the Employer in the evaluation of the bids, in

	accordance with ITB 28. In case of e-submission of bid, upon notification from the employer, the bidder shall also submit the original of documents comprising the bid as per ITB 11.1 for verification of submitted documents for acceptance of the e-submitted bid.
	24.2 If a Bidder does not provide clarifications of its bid by the date and time set in the Employer's request for clarification, its bid shall be rejected.
25. Deviations, Reservations, and Omissions	25.1 During the evaluation of bids, the following definitions apply: (a) "Deviation" is a departure from the requirements specified in the Bidding Document; (b) "Reservation" is the setting of limiting conditions or withholding from complete acceptance of the requirements specified in the Bidding Document; and (c) "Omission" is the failure to submit part or all of the information or documentation required in the Bidding Document.
26. Determination of Responsiveness	26.1 The Employer's determination of a bid's responsiveness is to be based on the contents of the bid itself, as defined in ITB 11.
	26.2 A substantially responsive bid is one that meets the requirements of the Bidding Document without material deviation, reservation, or omission. A material deviation, reservation, or omission is one that, (a) if accepted, would: (i) affect in any substantial way the scope, quality, or performance of the Works specified in the Contract; or (ii) limit in any substantial way, inconsistent with the Bidding Document, the Employer's rights or the Bidder's obligations under the proposed Contract; or (b) if rectified, would unfairly affect the competitive position of other Bidders presenting substantially responsive bids.
	26.3 If a bid is not substantially responsive to the requirements of the Bidding Document, it shall be rejected by the Employer and may not subsequently be made responsive by correction of the material deviation, reservation, or omission.
	26.4 In case of e-submission bids, the Employer evaluates the bid on the basis of the information in the electronically submitted bid files. If the Bidder cannot substantiate or provide evidence to establish the information provided in e-submitted bid through documents/ clarifications as per ITB Clause 24.1, the bid shall not be considered for further evaluation.
27. Nonconformities, Errors, and Omissions	27.1 Provided that a bid is substantially responsive, the Employer may waive any non-conformities in the bid that do not constitute a material deviation, reservation, or omission.
	27.2 Provided that a bid is substantially responsive, the Employer may request that the Bidder submit the necessary information or documentation, within a reasonable period of time, to rectify nonmaterial nonconformities in the bid related to documentation requirements. Requesting information or documentation on such nonconformities shall not be related to any aspect of the price of the bid. Failure of the Bidder to comply with the request may result in the rejection of its bid.
	27.3 Provided that a bid is substantially responsive, the Employer shall rectify

	quantifiable nonmaterial nonconformities related to the Bid Price. To this effect, the Bid Price shall be adjusted, for comparison purposes only, to reflect the price of a missing or non-conforming item or component. The adjustment shall be made using the methods indicated in Section III (Evaluation and Eligibility Criteria).
	27.4 If the monetary value of such non-conformities is found to be more than fifteen percent of the Bid Price of the bidder on account of minor discrepancies pursuant to ITB 27.3, such bid shall be considered non responsive and shall not be involved in evaluation.
28. Correction of Arithmetical Errors	28.1 Provided that the bid is substantially responsive, the Employer shall correct arithmetical errors on the following basis: (a) only for unit price Contracts, if there is a discrepancy between the unit price and the total price that is obtained by multiplying the unit price and quantity, the unit price shall prevail and the total price shall be corrected, unless in the opinion of the Employer there is an obvious misplacement of the decimal point in the unit price, in which case the total price as quoted shall govern and the unit price shall be corrected; (b) if there is an error in a total corresponding to the addition or subtraction of subtotals, the subtotals shall prevail and the total shall be corrected; and (c) If there is a discrepancy between the bid price in the Summary of Bill of Quantities and the bid amount in item (c) of the Letter of Bid, the bid price in the Summary of Bill of Quantities will prevail and the bid amount in item (c) of the Letter of Bid will be corrected. (d) if there is a discrepancy between words and figures, the amount in words shall prevail, unless the amount expressed in words is related to an arithmetic error, in which case the amount in figures shall prevail subject to (a) ,(b) and (c) above.
	28.2 If a Bidder does not accept the correction of arithmetical errors, its bid shall be disqualified and its bid security shall be forfeited.
29. Evaluation of Bids	29.1 The Employer shall use the criteria and methodologies listed in this Clause. No other evaluation criteria or methodologies shall be permitted.
	29.2 To evaluate a bid, the Employer shall consider the following: (a) the bid price, excluding Value Added Tax and Provisional Sums in the Summary Bill of Quantities, for Unit Rate Contracts, or Schedule of Prices for lump sum Contracts, but including Day work items, where priced competitively; (b) adjustment for correction of arithmetic errors in accordance with ITB 28.1; (c) adjustment due to discounts offered in accordance with ITB 13.4; (d) adjustment for nonconformities in accordance with ITB 27.3; (e) application of all the evaluation factors indicated in Section III (Evaluation and Eligibility Criteria); If the evaluated Bid Price of the Bidder is more than 30 (thirty) percent below or substantially higher than the cost estimate, the Employer shall reject the Bid as non-responsive.
	29.3 The estimated effect of the price adjustment provisions of the Conditions of Contract, applied over the period of execution of the Contract, shall not be taken into account in bid evaluation.
	29.4 If this Bidding Document allows Bidders to quote separate prices for different

	Lots (Contracts), and to award multiple Contracts to a single Bidder **as specified in BDS**, the methodology to determine the lowest evaluated price of the Contract combinations, including any discounts offered in the Letter of Bid, is specified in Section III (Evaluation and Eligibility Criteria).
	29.5 If the bid for a Unit Rate Contract, evaluated as per ITB 30.1, is front-loaded or has quoted abnormally high rate for any item believing that the item was underestimated, the Employer **shall** require the Bidder to provide clarification along with detailed rate analysis, for any or all items of the Bill of Quantities as per ITB 24.1. The rate analysis submitted shall be analyzed and compared against prevailing norms and rates, on the basis of the work execution methodology, technology, and management methods specified by the bidder. If the clarification is deemed unsatisfactory, the Employer shall require that the amount of the performance security be increased at the expense of the Bidder as **specified in BDS**.
	29.6 In case of e-submission bids, the Employer evaluates the bid on the basis of the information in the electronically submitted bid files. If the Bidder cannot substantiate or provide evidence to establish the information provided in e-submitted bid through documents/ clarifications as per ITB Clause 24.1, the bid shall not be considered for further evaluation.
	29.7 If all the Bids evaluated are substantially higher than the cost estimate, the employer may negotiate with the bidder who submitted the lowest evaluated substantially responsive Bid to propose a lump sum discount rate in order to bring the bid price within the approved cost estimate. However, no change in the substance of the bid is permitted during the negotiations.
	29.8 If no agreement can be reached as per ITB 29.8, the employer shall cancel the procurement proceedings.
30. Comparison of Bids	30.1 The Employer shall compare all substantially responsive bids in accordance with ITB 29.2. The Employer shall determine the Average Bid Price of all the substantially responsive Bids. The Bid Price which is closest to the Average Bid Price AND is not substantially higher than the cost estimate shall be selected for awarding the contract. In case two or more Bid Prices are determined to be equally closest to the Average Bid Price, the Bid Price which is below the Average Bid Price shall be selected for awarding the contract.
	30.2 While evaluating the Bid Price as per ITB 30.1, if the Bid Price of two or more Bidders is found to be equal, the Employer shall select the bid for awarding the contract by drawing of lots in presence of Bidders' designated representatives who choose to attend in date, time and place as notified by the Employer in writing to the concerned bidders. The Bidders' representatives who are present shall be requested to sign a record evidencing their attendance. The omission of a Bidder's signature on the record or the absence of a Bidder during the drawing of lots shall not invalidate the contents and the effect of the record. The method of drawing of lots shall be determined by the Employer.
31. Employer's Right to Accept Any Bid, and to Reject Any or	31.1 The Employer reserves the right to accept or reject any bid, and to annul the bidding process and reject all bids at any time prior to Contract award, without thereby incurring any liability to Bidders. In case of annulment, all bids submitted and specifically, bid securities, shall be promptly returned to the

All Bids	Bidders.
	31.2 The public entity shall give notice of the rejection of bids or the cancellation of the procurement proceedings pursuant to ITB 31.1, along with the reasons for such rejection or cancellation, to all bidders participating in the bid**.**
	31.3 Where any bidder requests, within thirty (30) days of the communication of the notice pursuant to ITB 31.2, the grounds for the rejection of all bids or the cancellation of the procurement proceedings, the public entity shall provide such information to that bidder**.**
F. Award of Contract	
32. Award Criteria	32.1 The Employer shall award the Contract to the Bidder whose Bid Price is selected as per ITB 29.8, ITB 30.1 or ITB 30.2 and is substantially responsive to the Bidding Document, provided further that the Bidder is determined to be qualified to perform the Contract satisfactorily.
33. Letter of Intent to Award the Contract/Notification of Award	33.1 The Employer shall notify the concerned Bidder whose bid has been selected in accordance with ITB 32.1 within seven days of the selection of the bid, in writing that the Employer has intention to accept its bid and the information regarding the name, address and amount of selected bidder shall be given to all other bidders who submitted the bid.
	33.2 After issuance of the notice under ITB 33.1 if the concerned bidder provides information pursuant to ITB 4.9 regarding saturation of maximum number of contracts, the employer shall disqualify the bidder and shall select the next Bidder whose Bid Price is closest to the previously determined Average Bid Price in accordance with ITB 32.1 and notify accordingly as per ITB 33.1.
	33.3 If no bidder submits an application pursuant to ITB 36 within a period of seven days of the notice provided under ITB 33.1, the Employer shall, accept the bid selected in accordance with ITB 32.1 and Letter of Acceptance shall be communicated to the selected bidder prior to the expiration of period of Bid validity, to furnish the performance security and sign the contract within fifteen days.
	33.4 After communicating letter of acceptance under ITB 33.3, if the concerned bidder provides information pursuant to ITB 4.9 regarding saturation of maximum number of contracts, the employer shall reject the bid of that bidder and shall select the next Bidder whose Bid Price is closest to the previously determined Average Bid Price in accordance with ITB 32.1 and shall issue the notice accordingly as per ITB 33.1. In such case bid security of the rejected bidder shall not be forfeited.
34. Performance Security	34.1 Within Fifteen (15) days of the receipt of Letter of Acceptance from the Employer, the successful Bidder shall furnish the performance security in an amount equal to 5 (five) percent of the Bid Price from Commercial Bank or Financial Institution eligible to issue Bank Guarantee as per prevailing Law in Nepal in accordance with the conditions of Contract using Sample Form for the Performance Security included in Section IX (Contract Forms), or another form acceptable to the Employer. The Bid Price shall be without VAT but including Provisional Sum.
	34.2 Failure of the successful Bidder to submit the above-mentioned Performance Security or to sign the Contract Agreement shall constitute sufficient grounds

	for the annulment of the award and forfeiture of the bid security. In that event the Employer may award the Contract to the next Bidder whose Bid Price is closest to the previously determined Average Bid Price in accordance with ITB 32.1 whose offer is substantially responsive and is determined by the Employer to be qualified to perform the Contract satisfactorily. The process shall be repeated according to ITB 33.
35. Signing of Contract	35.1 The Employer and the successful Bidder shall sign the Contract Agreement within the period as stated ITB 34.1.
	35.2 At the same time, the Employer shall affix a public notice on the result of the award on its notice board and make arrangement for causing such notice to be affixed on the notice board also of the **District Coordination Committee, District Administration Office, Provincial Treasury and Controller Office and District Treasury and Controller Office**. The Employer may make arrangements to post the notice into its website, if it has; and if it does not have, into the website of the Public Procurement Monitoring Office, identifying the bid and lot numbers and the following information: (i) the result of evaluation of bid; (ii) date of publication of notice inviting bids; (iii) name of newspaper; (iv) reference number of notice; (v) item of procurement; (vi) name and address of bidder making contract and (vii) contract price.
	35.3 Within thirty (30) days from the date of issuance of notification pursuant to ITB 33.1 unsuccessful bidders may request in writing to the Employer for a debriefing seeking explanations on the grounds on which their bids were not selected. The Employer shall promptly respond in writing to any unsuccessful Bidder who, requests for debriefing.
	35.4 If the bidder whose bid is accepted fails to sign the contract as stated ITB 35.1, the Public Procurement Monitoring Office shall blacklist the bidder on recommendation of the Public Entity.
36. Complaint and Review	36.1 If a Bidder is dissatisfied with the Procurement proceedings or the decision made by the Employer in the intention to award the Contract, it may file an application to the Chief of the Public Entity within Seven (7) days of providing the notice under ITB 33.1 by the Public Entity, for review of the proceedings stating the factual and legal grounds.
	36.2 Late application filed after the deadline pursuant to ITB 36.1 shall not be processed.
	36.3 The chief of Public Entity shall, within five (5) days after receiving the application, give its decision with reasons, in writing pursuant to ITB 36.1: (a) whether to suspend the procurement proceeding and indicate the procedure to be adopted for further proceedings; or (b) to reject the application. The decision of the chief of Public Entity shall be final.

SECTION - II
Bid Data Sheet

This section consists of provisions that are specific to each procurement and supplement the information or requirements included in Section I. Instructions to Bidders.

A. General	
ITB 1.1	The number of the Invitation for Bids is : SSRM-ROL-W-NCB-03-2083/084.
ITB 1.1	The Employer is: Sunil Smriti Rural Municipality,Office of Rural Municipal Excutive,Sulichaur,Rolpa
ITB 1.1	**Multiple Contract or lots (contracts) is not applicable** The number and identification of lots(contracts) / multiple contracts comprising this bidding process is: SSRM-ROL-W-NCB-03-2083/084
ITB 2.1	The name of the Project **Building Construction of Secondary School (Ward No.05)**
ITB 4.1 (a)	Maximum number of partner in a joint venture shall be : ***3 (three)***
ITB 4.2	For GoN funded: Eligible countries: ***Nepal***
ITB 4.4	For GoN: ***https://bolpatra.gov.np/egp***
ITB 4.8 & ITB 4.9	For GoN Funded: The Bidder, including all parties constituting the Bidder, shall be ineligible to participate in the open competitive bidding process if it has already secured **five (5)** construction contracts (in open competitive bidding) and has not yet completed the work as stipulated in the respective contracts. Following Procurement of Works contracts shall not be counted for this purpose: a) The works for which tender were invited or contracts accepted before 2078-12-03 B.S (March 17, 2022 A.D) b) The works for which tender have been invited and contracts accepted after 2078-12-03 B.S (March 17, 2022 A.D) but the work acceptance report has been approved according to Rule 117 of PPR. c) The works for which tenders were invited or contracts accepted under all types of foreign assistance.
ITB 5.1	For GoN funded: For the purpose of Country of Origin: "all Countries"
B. Bidding Document	
ITB 7.1	For clarification purposes only, the Employer's address is: Attention: Chief Administrative Officer,Sunilsmriti Rural Municipality Address: Sulichaur Rolpa, Lumbini Province,Nepal Telephone: : 9857824775 Facsimile number: Electronic mail address: ssrminfo@gmail.com

ITB 7.4	A Pre-Bid meeting shall take place. Date: 02-10-2026. Time:01:00PM Place: Sunil Smriti Rural Municipality,Office A site visit shallnot be organized by the Employer.
ITB 7.5	Time for request: Requests for clarification should be received by the Employer no later than 10 days prior to the deadline for submission of bids.
C. Preparation of Bids	
ITB 10.1	The language of the bid is: English / Nepali
ITB 11.1 (b)	In accordance with ITB 12 and ITB 14, the following schedules shall be submitted with the bid, including the priced Bill of Quantities for Unit Rate Contracts and Schedule of Prices for lump sum contracts: NA
ITB 11.1 (h)	The Bidder shall submit with its bid the following additional documents :NA
ITB 13.6	The prices quoted by the Bidder **shall not be** subject to adjustment during the performance of the Contract.
ITB 15.1	The bid validity period shall be: ***Ninety (90) days***.
ITB 16.1	The Bidder shall furnish a bid security, from Commercial Bank or Financial Institution eligible to issue Bank Guarantee as per prevailing Law in Nepal with a minimum of **NRs 2,91,000.00** which shall be valid for 30 days beyond the validity period of the bid.
ITB 16.2 (b)	Account Name: GA.3 Dhauriti Khatta Sunilsmriti Bank Name: Global IME Bank Ltd Bank Address: Sunil Smriti Rural Municipality-04,Sulichaur,Rolpa Account Number: 8204010000004
ITB 17.1	In addition to the original of the bid, the number of copy/ies is/are: **NA**
ITB 17.2	The written confirmation of authorization to sign on behalf of the Bidder shall indicate: (a) The name and description of the documentation required to demonstrate the authority of the signatory to sign the Bid such as a Power of Attorney; and (b) In the case of Bids submitted by an existing or intended JV, an undertaking signed by all parties (i) stating that all parties shall be jointly and severally liable, and (ii) nominating a Representative who shall have the authority to conduct all business for and on behalf of any and all the parties of the JV during the bidding process and, in the event the JV is awarded the Contract, during contract execution.
D. Submission and Opening of Bids	
ITB 18.1	Bidders shall have the option of submitting their bids by hand/courier**.**
ITB 18.1 (b)	**<u>Electronic bid submission procedure:</u>** (a) Bidders submitting Bids electronically shall follow the electronic bid submission procedures specified in this clause.

i. Bidders who choose to submit their bids electronically, can view/download the bidding documents from ***"published bids"*** section of e-GP system, https://bolpatra.gov.np/egp.

ii. For the purpose of e-Submission, the bidder shall, at first, register in e-GP system and maintain their organization profile data and documents required during bid response preparation. The details of e-GP registration and profile management procedure are specified in Article No 9 and 10 respectively of e-GP Directives issued by PPMO, which can be downloaded from ***Download section*** of e-GP system.

iii. The bidders shall prepare their bids using data and documents maintained in bidder's profile, instruction provided by e-GP system and forms/format provided in the bidding document.

iv. Bidders may submit bids as a single entity or as a joint venture (JV). Bidder submitting bid in JV shall have to upload joint venture agreement along with partner(s) Bolpatra ID provided during bidder's registration.

v. Bidders (all partners in case of JV) shall update their profile data and documents required during preparation and submission of their bids.

vi. In case of bid submission in JV, the consent of the partners shall be obtained through the confirmation link sent to the registered email address and the partners shall have to acknowledge their confirmation.

vii. Bidders shall submit the required documents as specified in Section I-Instruction to Bidders, Section II-Bid Data Sheet and Section III-Evaluation and Eligibility Criteria of the bidding document. The format of the documents shall be in PDF and/or web form as provisioned in the e-GP system.

The required forms and documents shall be part of bid.

No.	Document	Requirement	Remarks
1.	Letter of Bid	Mandatory	PDF
2.	Bid Security / Bank Guarantee	Mandatory	PDF
3.	Firm or Company registration Certificate	Mandatory	PDF
4.	VAT and PAN registration Certificate	Mandatory (for domestic bidders only)	PDF
5.	Business Registration Licence	Mandatory	PDF
6.	Tax Clearance Certificate / Tax return submission evidence / evidence of time extension	Mandatory (for domestic bidders only)	PDF
7.	Power of Attorney of Bid signatory	Mandatory	PDF
8.	Joint venture agreement	Mandatory in case of JV Bids Only	PDF
9.	Completed Bill of Quantities (BoQ)	Mandatory	Online Forms

10.	Price Adjustment Table (if Applicable)	Mandatory (If Applicable)	Online Forms
11.	Additional documents specified in ITB 11.2 (h)	Mandatory (If any)	PDF

Note:

a) The documents specified as "Mandatory" should be included in e-submission and non-submission of the documents shall be considered as non-responsive bid.

b) Bidders (all partners in case of JV) should verify/update their profile documents as appropriate for the specific bid before submitting their bid electronically.

viii. After providing all the details and documents, the e-GP system will generate bid response documents for the bidder. Bidders shall download, verify and confirm the bid response documents prior to bid submission.

ix. For verifying the authentic user, the system will send one time password (OTP) in the registered e-mail address of the bidder. System will validate the OTP and then only allow bidders to submit their bid.

x. Electronically submitted bids can be modified and/or withdrawn through the system within the bid submission deadline.

xi. The bidder/bid shall meet the following requirements and conditions for e-submission of bids;

aa) The e-submitted bids must be readable through PDF reader.

bb) The bidders are fully responsible for using the e-GP system as per specified procedures and in no case the employer shall be held liable for bidder's inability to use the system.

cc) When a bidder submits electronic bid through the e-GP System, it is assumed that the bidder has prepared the bid by studying and examining the complete set of the bidding document and e-GP instruction including the provision stipulated in e-GP Directives.

ITB 19.1	**For bid submission purposes only, the Employer's address is :** Attention: Sunil Smriti Rural Municipality,Office of Rural Municipal Executive Sulichaur, Rolpa Address: Sunil Smriti Rural Municipality,Office of Rural Municipal Executive Sulichaur,Rolpa Lumbini Province,Nepal The deadline for bid submission is : Date :-**14-10-2026** **Time:- 12:00 P.M.**
ITB 22.1	The bid opening shall take place at : Address : Sunil Smriti Rural Municipality,Office of Rural Municipal Executive Sulichaur, Rolpa Sulichaur, Rolpa **Lumbini Province,Nepal**

	Date: **14-10-2026** **Time:- 01:00 P.M.**
E. Evaluation and Comparison of Bids	
ITB 29.4	Bidders are **not permitted** to quote separate prices for lots (Contracts), and a single Bidder will be awarded multiple lots (Contracts) based on provision of **Paragraph 1.1, Multiple Contracts Section III (Evaluation and Eligibility Criteria).**
ITB 29.5	The amount of the performance security be increased by Eight (8) percent of the quoted bid price (without VAT but Including PS).

SECTION - III

Evaluation and Eligibility Criteria

This Section contains all the criteria that the Employer shall use to evaluate bids and eligible Bidders. GoN/DP requires bidders to be qualified by meeting predefined eligibility criteria. In accordance with ITB 29, no other methods, criteria and factors shall be used. The Bidder shall provide all the information requested in the forms included in Section IV (Bidding Forms).

1. Evaluation

In addition to the criteria listed in ITB 29.2 (a) - (e) the following criteria shall apply:

1.1 Multiple Contracts

Pursuant to Sub-Clause ITB 29.4 of the Instructions to Bidders, if Works are grouped in multiple contracts, evaluation will be as follows:

Works are grouped in multiple contracts and pursuant to Sub-Clause 29.4 of the Instructions to Bidders, the Employer will evaluate and compare Bids on the basis of a contract, or a combination of contracts, or as a total of contracts in order to arrive at the least cost combination for the Employer by taking into account discounts offered by Bidders in case of award of multiple contracts.

1.2 Quantifiable Nonconformities and Omissions

Subject to ITB 13.2 and ITB 29.2, the evaluated cost of quantifiable nonconformities including omissions, is determined as follows:

[***Insert in bidding document:*** "Pursuant to ITB 27.3, the cost of all quantifiable nonmaterial nonconformities shall be evaluated, but excluding omission of prices in the Bill of Quantities. The Employer will make its own assessment of the cost of any nonmaterial nonconformities and omissions for the purpose of ensuring fair comparison of bids."]

2. Eligibility

Criteria	Compliance Requirements				Documents
Requirement	Single Entity	Joint Venture			Submission Requirements
		All Partners Combined	Each Partner	One Partner	
2.1 Conflict of Interest					
No conflicts of interest in accordance with ITB Sub-Clause 4.3.	must meet requirement	existing or intended JV must meet requirement	must meet requirement	not applicable	Letter of Bid
2.2 Government/DP Eligibility					
Not having been declared ineligible by government/DP, as described in ITB Sub-Clause 4.4.	must meet requirement	must meet requirement	must meet requirement	not applicable	Letter of Bid
2.3 Government-owned Entity					
Bidder required to meet conditions of ITB Sub-Clause 4.5.	must meet requirement	existing or intended JV must meet requirement	must meet requirement	not applicable	Letter of Bid, Forms ELI - 1, ELI - 2, with attachments
2.4 UN Eligibility					
Not having been declared ineligible based on a United	must meet	existing or	must meet	not	Letter of Bid

Nations resolution or Employer's country law, as described in ITB Sub-Clause 4.7.	requirement	intended JV must meet requirement	requirement	applicable	
2.5 Bidder's Running Contracts					
Bidder's have not yet secured five (5) number of construction contracts[2](in open competitive bidding) as described in ITB Sub-Clause 4.8.	must meet requirement	existing or intended JV must meet requirement	must meet requirement	not applicable	Letter of Bid, Form ELI-3
2.6 Other Eligibility					
Firm or Company Registration Certificate	must meet requirement	not applicable	must meet requirement	not applicable	Document attachment
Business Registration License	must meet requirement	not applicable	must meet requirement	not applicable	Document attachment
VAT and PAN Registration certificate	must meet requirement	not applicable	must meet requirement	not applicable	Document attachment
Tax clearances certificate for the F/Y 2082/083 or Tax return submission 2081/082 evidence or evidence of tax time extension for 2081/082	must meet requirement	not applicable	must meet requirement	not applicable	Document attachment
Additional requirements ***[Insert if any]***	…….	……	……	……	……

[2]Note: Following Procurement of Works contracts shall not be counted for this purpose:

a) The works for which tender were invited or contracts accepted before 2078-12-03 B.S or March 17, 2022 A.D

b) The works for which tender have been invited and contracts accepted after 2078-12-03 B.S or i.e March 17, 2022 A.D and accepted but the work acceptance report has been approved according to Rule 117 of PPR.

c) The works for which tenders were invited or contracts accepted under all types of foreign assistance

अमरेन्द्र प्रसाद दिवाल
प्रमुख प्रशासकीय अधिकृत

SECTION - IV

Bidding Forms

This Section contains the forms which are to be completed by the Bidder and submitted as part of its Bid.

Letter of Bid

The Bidder must accomplish the Letter of Bid in its letterhead clearly showing the Bidder's complete name and address.

Date: .....

Name of the contract: .....

Invitation for Bid No.: .....

To: ***[Insert Complete name of Employer]*** ……

We, the undersigned, declare that:

(a) We have examined and have no reservations to the Bidding Documents, including Addenda issued in accordance with Instructions to Bidders (ITB) Clause 8;

(b) We offer to execute in conformity with the Bidding Documents the following Works: ***[Insert Description of the works].***

(c)The total price of our Bid, excluding any discounts offered in item (d) below is: ***[Insert one of the options below as appropriate]*** or when left blank is the Bid Price indicated in the Bill of Quantities.

Option 1, in case of single contract: Total price is: ***[insert the total price of the Bid in words and figures]***;

Or

Option 2, in case of multiple lots (contracts): (i) Total price of each lot (contracts): ***[insert the total price of each lot in words and figures]***; (ii) Total price of subject contract [say Lot1] and Lot2 [another contract] [insert the total price in words and figures]; (iii) Total price of subject contract [say Lot1]and Lot3 [another contract] ***[insert the total price in words and figures]***; Total price of subject contract [say Lot1], Lot2 [another contract], Lot3 [another contract], ***……..[insert the total price in words and figures];***

(d) The discounts offered and the methodology for their application for subject contract [single contract] are:…….. [For Bidding Documents not provisioning multiple contracts]

Add following if Bidding Document provisions applicability of multiple contracts

The discounts offered and the methodology for their application for subject contract [say Lot1] and Lot2 [another contract] are:……..

The discounts offered and the methodology for their application for subject contract [say Lot1] and Lot3 [another contract] are:……..

The discounts offered and the methodology for their application for subject contract [say Lot1], Lot2 [another contract] and Lot3 [another contract],……, are:……..

[Note:

1. Formulate possible combinations depending upon the number of lots under Bidding Process and modify accordingly Paragraph (c) and (d)]

(e) Our bid shall be valid for a period of ……..***[insert validity period as specified in ITB 15.1]*** days from the date fixed for the bid submission deadline in accordance with the Bidding Documents, and it shall remain binding upon us and may be accepted at any time before the expiration of that period;

(f) If our bid is accepted, we commit to obtain a performance security in accordance with the Bidding Document;

(g) Our firm, including any subcontractors or suppliers for any part of the Contract, have nationalities from eligible countries or any countries [insert the nationality of the Bidder, including that of all parties that comprise the Bidder if the Bidder is a consortium or association, and the nationality of each Subcontractor and Supplier];

(h) We, including any subcontractors or suppliers for any part of the contract, do not have any conflict of interest in accordance with ITB 4.3;

(i) We are not participating, as a Bidder or as a subcontractor, in more than one bid in this bidding process in accordance with ITB 4.3;

(j) Our firm, its affiliates or subsidiaries, including any Subcontractors or Suppliers for any part of the contract, has not been declared ineligible, under the Employer's country laws or official regulations or by an act of compliance with a decision of the United Nations Security Council;

(k) [We are not a government owned entity] / [We are a government owned entity but meet the requirements of ITB 4.5][*];

(l) We understand that this bid, together with your written acceptance thereof included in your notification of award, shall constitute a binding contract between us, until a formal contract is prepared and executed;

(m) We declare that, we have not been black listed as per ITB 3.4 and no conflict of interest in the proposed procurement proceedings and we have not been punished for an offense relating to the concerned profession or business.

(n) We declare that we have not yet secured five (5) number of constructions contracts[3] (in open competitive bidding) as described in ITB Sub-Clause 4.9.

(o) We understand that you are not bound to accept the bid closest to the Average Bid Price or any other bid that you may receive; and

(p) If awarded the contract, the person named below shall act as Contractor's Representative:

(q) We agree to permit the Employer/DP or its representative to inspect our accounts and records and other documents relating to the bid submission and to have them audited by auditors appointed by the Employer.

---

[*] Note: Use one of the two options as appropriate.

[3] Note: Following Procurement of Works contracts shall not be counted for this purpose

a) The works for which tender were invited or contracts accepted before 2078-12-03 B.S (March 17, 2022 A.D).

b) The works for which tender have been invited and contracts accepted after 2078-12-03 B.S (March 17, 2022 A.D) and accepted but the work acceptance report has been approved according to Rule 117 of PPR.

c) The works for which tenders were invited or contracts accepted under all types of foreign assistance.

(r) We declare that we are solely responsible for the authenticity of the documents submitted by us. The document and information submitted by us are true and correct. If any document/information given is found to be concealed at a later date, we shall accept any legal actions by the Employer.

Name: ***[insert complete name of the person signing the Bid]***.....

In the capacity of ***[insert legal capacity of person signing the Bid]***.....

Signed ***[signature of the person whose name and capacity are shown above]***……

Duly authorized to sign the Bid for and on behalf of ***[insert complete name of the Bidder]***……

Date ***[insert date of signing]***…….....

Table of Price Adjustment Data[4]

[To be used if Price Adjustment is applicable as per GCC 53.1]

Code	Index Description	Source of Index*	Base Value and Date	Employer's Proposed Weighting Range (coefficient)	Bidder's Proposed Weighting (coefficient)**
1	**2**	**3**	**4**	**5**	**6**
	Non - adjustable (A)			0.15	0.15
	Labor (b)				
	Materials (c)***				
	…				
	Equipment usage (d)				
		Total			**1.00**

*Normally following source of index shall apply. Public Entity shall choose applicable Index for each item.

(a) Labor:

"National Salary and Wage Rate Index"- "Construction Labor" of Nepal Rastra Bank

or

rate fixed by District Rate Fixation Committee

(b) Material: "National Wholesale Price Index" - Construction Materials" of Nepal Rastra Bank

(c) Equipment usage:

"National Wholesale Price Index"-"Machinery and Equipment" of Nepal Rastra Bank

or

"Fuel" Price fixed by Nepal Oil Corporation.

** Bidders proposed weightings should be within the range specified by the Employer in column - 5

***Note: The materials can be broken down into major construction materials if necessary. In this case the source of index shall be the specified by Employer, preferably as per the published ex-factory price or published price from the sole authorized seller.

[4] Non-compliance of the data (stipulated by the bidder in this table) with requirements described here shall not be grounds for bid rejection and such non-compliance will be subject to clarification and rectification prior to contract award.

Table of Price Adjustment Data[5]

[To be used if Price Adjustment is applicable as per GCC 53.6]

Code	Construction Material*	Unit	Base Price (NRs/Unit) (Ex-factory)	Source (Factory)**
1	2	3	4	5

* Major construction materials to be specified by Employer in column - 2.

** Base Price and source normally to be specified by Employer (or alternatively informed to be proposed by bidder) in column 4 and5.

Note:
The base prices of the construction materials shall be taken as of 30 days before the deadline for submission of the Bid as quoted by the Bidder and verified by the Employer. For the purpose of calculation of price adjustment, the Ex-factory price of the same source shall be taken into consideration.

[5] Non-compliance of the data (stipulated by the bidder in this table) with requirements described here shall not be grounds for bid rejection and such non-compliance will be subject to clarification and rectification prior to contract award.

Bid Security

Bank Guarantee

Bank's Name, and Address of Issuing Branch or Office

(On letterhead paper of the Bank)

Beneficiary: ..... ***[Insert name and address of Employer]*** …….

Date: ……...

Bid Security No.: .....

We have been informed that . …… ***.[insert name of the Bidder]*** (hereinafter called "the Bidder") intends to submit its bid (hereinafter called "the Bid") to you for the execution of ……... ***[Insert name of Contract .*** …… under Invitation for Bids No. ……***[insert IFB No.]*** ("the IFB").

Furthermore, we understand that, according to your conditions, bids must be supported by a bid guarantee.

At the request of the Bidder, we……. . ***[Insert name of Bank]*** …….. hereby irrevocably undertake to pay you any sum or sums not exceeding in total an amount of Nepalese Rupees. . ***……....[Insert amount in figures and amount in words]*** upon receipt by us of your first demand in writing accompanied by a written statement stating that the Bidder is in breach of its obligation(s) under the bid conditions, because the Bidder:

(a) has withdrawn or modifies its Bid:

(i) during the period of bid validity specified by the Bidder on the Letter Bid, in case of electronic submission

(ii) from the period twenty-four hours prior to bid submission deadline up to the period of bid validity specified by the Bidder on the Letter of Bid, in case of hard copy submission; or

(b) does not accept the correction of errors in accordance with the Instructions to Bidders (hereinafter "the ITB"); or

(c) having been notified of the acceptance of its Bid by the Employer during the period of bid validity, (i) fails or refuses to execute the Contract Agreement, or (ii) fails or refuses to furnish the performance security, in accordance with the ITB; or

(d) is involved in fraud and corruption in accordance with the ITB; or

(e) a Bidder changes the prices or substance of the bid while providing information pursuant to ITB 24.1; or

(f) if the bidder fails to inform about the saturation of the maximum number of contracts as per ITB 4.9.

This guarantee will remain in force up to and including the date ……**number**……days after the deadline for submission of Bids as such deadline is stated in the instructions to Bidders or as it may be extended by the Employer, notice of which extension(s) to the Bank is hereby waived. Any demand in respect of this guarantee should reach the Bank not letter than the above date.

This Bank guarantee shall not be withdrawn or released merely upon return of the original guarantee by the Bidder unless notified by you for the release of the guarantee.

This guarantee is subject to the Uniform Rules for Demand Guarantees (URDG), 2010 Revisions, ICC Publication No. 758 .except that the supporting statement under Article 15(a) is hereby excluded.

. . .Bank's seal and authorized signature(s) . . .

Note:

The bid security of ……..……. has been counter guaranteed by the Bank ……..……... ...…… on ……....……..……. (Applicable for Bid Security of Foreign Banks).

Bidder's Information Format

Site Organization

Method Statement

Mobilization Schedule

Construction Schedule

Others

Bidder’s Information

Form ELI - 1: Bidder’s Information Sheet

Bidder's Information	
Bidder's legal name	
In case of JV, legal name of each partner	
Bidder's country of constitution	
Bidder's year of constitution	
Bidder's legal address in country of constitution	
Bidder's authorized representative (name, address, telephone numbers, fax numbers, e-mail address)	
Attached are copies of the following original documents.	
1. In case of single entity, articles of incorporation or constitution of the legal entity named above, in accordance with ITB 4.1 and 4.2. 2. Authorization to represent the firm or JV named in above, in accordance with ITB 17.2. 3. In case of JV, letter of intent to form JV or JV agreement, in accordance with ITB 4.1. 4. In case of a government-owned entity, any additional documents not covered under 1 above required to comply with ITB 4.5.	

Form ELI - 2: JV Information Sheet

Each member of a JV must fill in this form

JV / Specialist Subcontractor Information	
Bidder's legal name	
JV Partner's or Subcontractor's legal name	
JV Partner's or Subcontractor's country of constitution	
JV Partner's or Subcontractor's year of constitution	
JV Partner's or Subcontractor's legal address in country of constitution	
JV Partner's or Subcontractor's authorized representative information (name, address, telephone numbers, fax numbers, e-mail address)	
Attached are copies of the following original documents.	
1. articles of incorporation or constitution of the legal entity named above, in accordance with ITB 4.1 and 4.2. 2. Authorization to represent the firm named above, in accordance with ITB .2. 3. In the case of government-owned entity, documents establishing legal and financial autonomy and compliance with commercial law, in accordance with ITB 4.5.	

Form ELI - 3: Bidder's Running Contracts****

Each member of a JV must fill in this form

	Bidder's Running Contracts				
Name of office	**Contract Identification no.**	**Source of Fund***	**Date of issuance of Letter of Acceptance**	**Status of contract****	**Date of Issuance of Taking Over Certificate*****

* Mention GON funded or DP funded or Other PE (Insert name) funded

** Mention "Yet to sign" if contract is not signed, "Running" if contract has been signed and contract is running and "Substantially completed" if taking over certificate has been issued.

*** Insert date of issuance of taking over certificate if the awarded contract has been substantially completed and taking over certificate has been issued.

****Note: Following Procurement of Works contracts shall not be counted for this purpose

a) The works for which tender were invited or contracts accepted before 2078-12-03 B.S (March 17, 2022 A.D).

b) The works for which tender have been invited and contracts accepted 2078-12-03 B.S (March 17, 2022 A.D) but the work acceptance report has been approved according to Rule 117 of PPR.

c) The works for which tenders were invited or contracts accepted under all types of foreign assistance.

Part – II

REQUIREMENTS

Table of Clauses

Section - V Works Requirements 46

Scope of Work …….. 47

Specifications ……..... 48

Notes on the Specifications ……..... 48

Sample Clause: Equivalency of Standards and Codes ……..... 49

Drawings ……..……..50

Supplementary Information ……..... 51

Section - VI Bill of Quantities ... ……... 52

Notes for Unit Rate Contracts……. 52

Preamble of Bill of Quantities …….. 53

Bill of Quantities 56

SECTION - V
Works Requirements

This Section contains the Scope of Work, Specification, the Drawings, and supplementary information that describe the Works to be procured.

Scope of Work

[insert brief scope of works.]

Specifications

Notes on the Specifications

A set of precise and clear specifications is a prerequisite for Bidders to respond realistically and competitively to the requirements of the Employer without qualifying or conditioning their Bids. The specifications must be drafted to permit the widest possible competition and, at the same time, present a clear statement of the required standards of workmanship, materials, and performance of the goods and services to be procured. Only if this is done will the objectives of economy, efficiency and fairness in procurement be realized, responsiveness of Bids be ensured, and the subsequent task of bid evaluation facilitated. The specifications should require that all goods and materials to be incorporated in the Works be new, unused, of the most recent or current models, and incorporate all recent improvements in design and materials unless provided otherwise in the Contract.
Samples of specifications from previous similar projects are useful in this respect. The use of metric units is encouraged by the Funding Agency in case of funding assisted projects. Most specifications are normally written specially by the Employer or Project Manager to suit the Contract Works in hand. The available standard specification of works of Ministry of Physical Infrastructure and Transport, DoLI and Other line Ministries can be adopted for respective civil construction works.
There are considerable advantages in standardizing General Specifications for repetitive Works in recognized public sectors, such as highways, urban housing, irrigation, and water supply, in the same country or region where similar conditions prevail. The General Specifications should cover all classes of workmanship, materials, and equipment commonly involved in construction, however it may not necessarily be adequate to be used in a particular Works Contract and may necessitate preparation of Particular (Special) Specifications to amend and or supplement the provision of the General Specifications to meet the requirement of the particular Works.

Care must be taken in drafting specifications to ensure that they are not restrictive. In the specification of standards for goods, materials, and workmanship, recognized international standards should be used as much as possible. Where other particular standards are used, whether national standards of Nepal or other standards, the specifications should state that goods, materials, and workmanship that meet other authoritative standards, and which ensure substantially equal or higher quality than the standards mentioned, will also be acceptable.

Employers should decide whether technical solutions to specified parts of the Works are to be permitted. Alternatives are appropriate in cases where obvious (and potentially less costly) alternatives are possible to the technical solutions indicated in the Procurement Documents for certain elements of the Works, taking into consideration the comparative specialized advantage of potential bidders. For example:

The Employer should provide a description of the selected parts of the Works with appropriate references to Drawings, Specifications, Bill of Quantities, and Design or Performance criteria, stating that the alternative solutions if applicable shall be at least structurally and functionally equivalent to the basic design parameters and specifications.

Such alternative solutions shall be accompanied by all information necessary for a complete evaluation by the Employer, including drawings, design calculations, technical specifications, breakdown of prices, proposed construction methodology, and other relevant details.

Sample Clause: Equivalency of Standards and Codes

Wherever reference is made in the Contract to specific standards and codes to be met by the goods and materials to be furnished, and work performed or tested, the provisions of the latest current edition or revision of the relevant standards and codes in effect shall apply, unless otherwise expressly stated in the Contract. Where such standards and codes are national, or relate to a particular country or region, other authoritative standards that ensure a substantially equal or higher quality than the standards and

codes specified will be accepted subject to the Project Manager's prior review and written consent. Differences between the standards specified and the proposed alternative standards shall be fully described in writing by the Contractor and submitted to the Project Manager at least 30 days prior to the date when the Contractor desires the Project Manager's consent. In the event the Project Manager determines that such proposed deviations do not ensure substantially equal or higher quality, the Contractor shall comply with the standards specified in the documents. These Notes for Preparing Specifications are intended only as information for the Employer or the person drafting the Procurement Documents. They should not be included in the final documents.

Specifications of Building Construction (Civil) Works

1. General

The Work shall be carried out according to these Specifications whether specifically mentioned elsewhere or not. No extra in any form will be paid unless it is definitely stated as an item in the Bill of Quantities.

Whenever the Specifications are not given or when the Specifications are ambiguous, the relevant Nepal Standards or Indian Standards and further amendments will be considered as final and binding.

All Works shall be carried out simultaneously with electrical, plumbing, sanitary and other services and in co-operation with the Contractors of the above services. The Work shall be carried on till it is completed satisfactorily along with the completion of other essential services. The building Contractor shall keep the other Contractors informed of the proposed program of Work, well in advance, so that the building Work is not hindered. The Contractor shall further cooperate with other Contractors in respect of any facility required by them e.g. making holes in shuttering for sanitary, pipes, electric conduits, fan hook etc. However, no extra payment shall be admissible for such reasonable assistance and facilities afforded to other Contractors and the building Contractors shall be deemed to have taken these factors into consideration while quoting the rates.

The Work shall be related to the drawings which the Contractor is presumed to have studied. Nothing extra will be paid for any item because of its shape, location or other difficult circumstances, even if the schedule makes no distinction, as long as the item is shown in the drawings.

The sources of materials stated in the Specifications are those from which materials are generally available. However, materials not conforming to Specifications shall be rejected even if they come from the stated sources. The Contractor should satisfy himself that sufficient quantity of materials of acceptable Specification is available form the stated or other sources.

The requirements of Specifications shall be fulfilled by the Contractor without extra charges i.e. the item rates quoted shall be deemed to have taken these Specifications into account.

These are requirements the Contractor shall fulfil after the issue of Letter of Acceptance but before the Date of Commencement.

1.1 Definitions

General:

Acceptable/Approved (Approval) - Acceptable to/approved by the Engineer.

Agreed - Agreed in writing.

As detailed - As detailed on the drawings.

Authorized/ordered/rejected - Authorized/ordered/rejected by the Engineer**Designated** - Shown on the drawings or otherwise specified by the Engineer or, in relation to an item scheduled in the bid documents, descriptive of an item to be priced by a bidder.

Indicated - Indicated in or reasonably to be inferred from the contract, or indicated in writing by the Engineer.

Instructed/directed/permitted -Instructed/directed/ permitted by the Engineer.

Satisfactory - Capable of fulfilling or having fulfilled the intended function.

Service - Any pipeline, cable, duct etc. for conveying or transmitting any fluid or other matter.

Submitted - Submitted with the tender or submitted to the Engineer, as appropriate.

Tolerances:

Deviation - The difference between the actual (i.e., measured) size or position and the specified size or position.

Permissible deviation - The specified limit(s) of deviation.

Tolerance - The range between the limits within which a size or position must lie.

Measurement and Payment:

Bill/schedule - The bill/schedule of quantities.

Billed/scheduled rate - The unit rate or price entered in the bill/schedule at which the Contractor undertakes to execute the particular work or to provide the required material, article or service, or to do any or all of these things, as set out in the item concerned.

Billed/scheduled - Listed in the bill/schedule of quantities.

Fixed charge - A charge for work that is executed without reference to time.

Method-related charge - The sum for an item inserted in the bill by the Contractor when tendering, to cover items of work relating to his intended method of executing the Works.

Time-related charge *- A charge for work the cost of which, to the Employer, is varied* in proportion to the length of time taken to execute the particular item scheduled.

Value-related charge - A charge that is directly proportional to the value of the contract.

1.2 Contractor's Office & Accommodation

Various works defined under this item are for the provision and maintenance of the Contractor's office, camps, stores, equipment yard, and workshops. The structure of the buildings shall be adequate, rainproof, spacious, airy and hygienic with proper lighting and toilet facilities. The area shall be kept neat and clean. Any garbage or sewage shall be disposed at a location and in a manner approved by the Engineer.

Space allocated for storage of various materials such as cement, reinforcement steel, and petroleum products etc. shall be clearly separated to avoid contamination.

Petroleum products shall be stored and handled in a way that avoids contamination of ground water. Workshops shall be installed with oil and grease traps for the same purpose.

Written information shall be given to and approval taken from the Engineer regarding proper establishment and maintenance of such camps. Failure in compliance with Engineer's instructions in respect of overall standard will lead to reduction or withholding of any payment due to the Contractor.

The Contractor shall provide at his own expense adequate temporary accommodation and toilet facilities for his Workmen and keep the same in good conditions. This may `be done to suit Site conditions with the approval of Project Engineer. The above mentioned temporary structures shall be removed on the completion of Works at Contractor's own cost. All materials shall belong to the Contractor.

The Contractor shall make his own arrangement for the supply of electric power and lighting arequired for construction purpose.

The Contractor shall make his own arrangement for all internal and external telephones and other communication means deemed necessary for the Works.

The Contractor shall make his own arrangement for office equipment and other consumable for his use for the Works.

1.3 Office for Engineer

The contractor shall provide and maintain offices for the use of the Engineer and his staff if provided in the contract

1.4 Safety Measures

The Contractor shall be responsible for safety of all workmen and other persons entering the Works and shall at his own expense; where not stated otherwise take all measures, subject to the Engineer's approval, necessary to ensure their safety. Such measures shall include but not be limited to:

- Provision of safety and emergency regulations for fire, gas, and electric shock prevention, together with rescue operation plan
- Safe control of flowing water
- Provision and maintenance of suitable lighting to provide adequate illumination at place of work with appropriate spares and standby unit
- Provision and maintenance of safe, sound slings, pulleys, ropes, and other lifting device
- Provision of safe access to any part of the works.
- Provision of notices in local dialect temporarily or permanently during construction at locations likely to be used by the public. Placement of such notices shall depend on the existence of the nature of work in the vicinity. These notices shall be in addition to any other statutory requirements demanded of the Contractor

The Contractor shall submit a proposal with detailed safety and emergency measures for the Engineer's approval. When the proposal has been approved, English and Nepali version of the regulations shall be made available to all of his Employees and the Engineer.

The Contractor shall ensure that all his Employees are fully conversant with the regulations, emergency and rescue procedures etc. and shall enforce a rule that will instantly dismiss any employee committing a serious breach of such regulations.

1.5 Notice Boards

The Contractor shall erect notice boards (1.2 m x 1.8 m) at the site giving details of the Contract in the format and wordings directed by the Engineer. These boards shall be erected within 14 days after the Contractor has been given the Possession of Site

The Contractor shall not erect any advertisement sign board on or along the work. The board shall be removed by the Contractor by the end of the Defects Liability Period.

2. Temporary Facilities:

2.1 Provision of Temporary Services

When the rehabilitation or replacement of existing public utilities requires their temporary disconnection, the Contractor shall provide the affected users with temporary services in at least the same standard as the original services. For water supply he may install temporary lines or arrange for regular supply by tankers. When forced to disconnect existing sewers the Contractor shall install temporary pipes of adequate size to carry off sewage from any private sewer facilities cut off by construction work. Connections to temporary pipes shall be made immediately by the Contractor upon cutting off the existing facility. No sewage shall be allowed to flow from any severed facility upon the ground surface or into trench excavation. Pipes used in temporary sewers may be plastic or approved flexible material.

Upon completion of work the Contractor shall replace all severed connections and restore to operating order the existing sanitary facilities. The Contractor without approval of the Engineer shall operate no valve or other controls in public service facilities. All users affected by such operation shall be notified by the Contractor at least one hour before the operation and advised of the probable time when service will be restored.

2.2 Protection of Adjoining Property

The Contractor shall control the movement of his crews and equipment on right-of-way including access routes approved by the Engineer so as to minimize damage to crops and property and shall endeavour to avoid marring the lands. Ruts and scars shall be obliterated and damage to land shall be corrected and the land shall be restored as closely as possible to its original conditions before final taking-over of the Works.

The Contractor shall be responsible directly to the Employer for any excessive or avoidable damage to crops or lands resulting from his operations whether on lands adjacent to right-of-way or on approved access road and deductions will be made from payment due to the Contractor to cover the amount of such excessive or avoidable damage as determined by the Engineer.

2.3 Reinstatement upon Completion

Temporary facilities shall be provided by the Contractor, only for as long as required after which he shall dismantle and remove the same from their place of use as speedily as possible. The Contractor in his yard shall safely store re-usable components. The place of use shall be cleared and reinstated immediately to at least the condition existing before the temporary facilities were provided to the satisfaction of the Engineer.

2.4 Measurement and Payment

Unless otherwise provided in the contract, no separate measurement and/or payment shall be made for all materials and works required under this clause. All costs in connection with the work specified herein shall be considered to be included with other related items of the work in the BOQ All provision of temporary services shall be covered by a provisional sum in the BOQ. The lump sum amounts indicated in BOQ shall be paid in pro-rata basis by dividing the total amounts by contract period in months. These payments will be incorporated in the interim certificates for payment.

2.5 Publicly And Privately Owned Services

- If any privately owned service for water, electricity, drainage, etc., passing through the site is affected by the works, the Contractor shall provide a satisfactory alternative service in full working order to the satisfaction of the owner of the services and of the Engineer before terminating the existing service.
- Drawing and scheduling the affected services like water pipes, sewers, cables, etc. owned by various authorities including Public Undertakings and Local Authorities included in the contract documents shall be verified by the Contractor for the accuracy of the information prior to the commencement of any work.
- Notwithstanding the fact that the information on affected services may not be exhaustive, the final position of these services within the works shall be supposed to have been indicated based on the information furnished by different bodies and to the extent the bodies are familiar with the final position. The Contractor must also allow for any effect of these services and alternations upon the works and for arranging regular meetings with the various bodies at the commencement of the contract and throughout the period of the works in order to maintain the required co-ordination. During the period of the works, the Contractor shall agree if the public utility bodies vary their decisions in the execution of their proposals in terms of program and construction, provided that, in the opinion of the Engineer, the Contractor has received reasonable notice thereof before the relevant alterations are put in hand.
- No clearance or alterations to the utility shall be carried out unless ordered by the Engineer.
- Any services affected by the works shall be restored immediately by the Contractor who must also take all measures reasonably required by the various bodies to protect their services and property during the progress of the works.
- The Contractor may be required to carry out the removal or shifting of certain services/utilities on specific orders from the Engineer for which payment shall be made to him. Such works shall be taken up by the Contractor only after obtaining clearance from the Engineer and ensuring adequate safety measures.

2.6 Insurance of works

- Insurance of Works
    - The Contractor shall take out Insurance for the Works from approved agency/institution staff if provided in the contract
    - Payments made to the agency/institution and stamp charges/duties incurred

if any, by the contractor in compliance of the above work shall be paid from Provisional Sum included for the item in the BOQ after submission of the insurance document to the satisfaction of the Engineer.

- Third Party Insurance
  - The Contractor shall take out Third Party Insurance from an approved agency/institution staff if provided in the contract
  - Payments made to the agency/institution and stamp charges/duties incurred if any, by the Contractor in compliance of the above work shall be paid from the Provisional Sum included for the item in the BOQ after submission of the documents to the satisfaction of the Engineer.
- Insurance of Contractor's Workmen and Employees
  - The Contractor shall insure against such liability as stipulated in Conditions of Particular Application.
  - The cost for works under this Sub-Clause shall be covered by the Contractor's overhead included in unit rates of other items in the BOQ.

2.7 Environmental Protection Works

The environment has been defined to mean surrounding area including human and natural resources to be affected by execution and after completion of works.

The Contractor shall take all precautions for safeguarding the environment during the course of the construction of the works. He shall abide by all prevalent laws, rules and regulations governing pollution and environmental protection.

The Contractor shall prohibit employees from unauthorized use of explosives, poaching wildlife and cutting trees. The Contractor shall be responsible for the action of his employees.

The Contractor is expected to arrange and execute the Works in such a way that existing environmental conditions are not deteriorated. Borrow pits and dumping sites used by the contractor shall be reinstated at his own cost by grass and/or tree plantation.

Written instruction/approval must be given to seek from the Engineer regarding protection and reinstatement of environment throughout the Contract period. Failure in compliance with Engineer's instructions in respect of overall standard will lead to reduction or withhold of payment. Further, any serious deterioration in the environment including pollution attributable to Contractor as determined by the Engineer, may result in deduction of actual expenditures incurred in their reinstatement done through separate agency, from any money due to the Contractor.

Environmental protection works, among others, shall also include the following:

2.8 Borrow/Quarry Sites

The Engineer shall have the power to disallow the method of construction and/or the use of any borrow/quarry area, if in his opinion, the stability and safety of the works or any adjacent structure is endangered, or there is undue interference with the natural or artificial drainage, or the method or use of the area will promote undue erosion.

All areas susceptible to erosion shall be protected as soon as possible either by temporary or permanent drainage works. All necessary measures shall be taken to prevent concentration of surface water and to avoid erosion and scouring of slopes and other areas. Any newly formed channels shall be backfilled.

Borrows/quarries shall be located away from the population centres, drinking water intakes, cultivable lands and drainage systems. The cutting of trees shall be minimized. Temporary ditches and/or settling basins shall be dug to prevent erosion. The undesirable ponding of water shall be prevented through temporary drains discharging to natural drainage channels.

Earthworks operations shall be strictly limited to the areas to be occupied by the permanent works and approved borrow areas and quarries unless otherwise permitted by the Engineer. Due provision shall be made for temporary drainage. Erosion and/or instability and/or sediment deposition arising from earthwork operations not in accordance with the Specifications shall be made good immediately by the Contractor.

The Contractor shall obtain the permission of the Engineer before opening up any borrows pits or quarries. Such borrow pits and quarries may be prohibited or restricted in dimensions and depth by the Engineer where:

(i) They might affect the stability or safety of the works or adjacent property;
(ii) They might interfere with natural or artificial drainage or irrigation;
(iii) They may be environmentally unsuitable.

The Contractor shall not purchase or receive any borrow materials from private individuals unless the source of such materials has been approved by the Engineer. At least 14 days before he intends to commence opening up any approved borrow pit or quarry, the Contractor shall submit to the Engineer his intended method of working and restoration. These shall include but not be limited to:

2.9 Disposal of Spoil and Construction Waste

Materials in excess of the requirements for permanent works and unsuitable materials shall be disposed off in locations and in the manner as agreed with the Engineer. The locations of disposal sites shall be such as not to promote instability, destruction of properties and public service systems. Exposed areas of such disposal sites shall be suitably dressed and be planted with suitable vegetation.

The Contractor shall plan his works in such a way that there is no spillage of POL products to the surface or sub-surface water.

2.10 Provision and Maintenance of Camps, Offices, Stores, Equipment Yards

Various works defined under this item are related to provision and maintenance of camps for work person and employees, Contractor's site offices, stores equipment yards and workshops. These camps must be adequate, rain-proof, spacious, airy and hygienic with proper lighting and materials storage facilities. The area shall be kept neat and clean.

Space allocated for storage of materials such as cement, gabion wire, reinforcing wire etc. shall in general be damp-free, rain-proof and away from petroleum products storage.

Permission may be granted by the Engineer to erect suitable camps within the right of way free of charge, if such establishments do not cause obstructions to traffic, nuisance to works execution and adverse effect to the environment.

Written information must be given to and approval be taken from the Engineer regarding proper establishment and maintenance of such camps. Failure in compliance with Engineer's instruction in

respect of overall standard will lead to reduction or with holding of payment.

2.11 Provision and Maintenance of Toilets

Provision of toilets for labour and employees shall be made to avoid public nuisance as well as pollution of water courses and air. The Contractor shall construct suitable septic tanks and/or soak pits along with room of pit-type latrines. Sufficient water must be provided and maintained in the toilets. Proper methods of sanitation and hygiene should be employed during the whole project duration.

2.12 Provision of Potable Water

The Contractor shall supply potable water along with commencement of work to Contractor's staff and work person both at camps and construction-sites. This arrangement shall be enforced to avoid proliferation and generation of various water borne diseases.

The Contractor shall inform the Engineer regarding sources, installation and operation of supply of potable water within a week after the supply is commenced.

2.13 Provision of First Aid/Medical Facilities

Provision of first aid/medical facilities shall be made along with commencement of work to provide quick medical service to injured/sick work person, and employees. Services shall also include on-the-way service and other arrangements required for taking them to the nearest hospital in case of emergency.

The scope of work shall include service of at least one part-time experienced health worker/health assistant with a minimum of once a week full time site visit as work assignment. The Contractor shall also supply and provide adequate medicines and facilities required for standard first aid.

The Contractor shall inform the Engineer regarding the medical facility within a week after its establishment and operation.

2.14 Hazardous Materials

The Contractor shall not store hazardous materials near water surfaces. The Contractor shall provide protective clothing or appliances when it is necessary to use some hazardous substances. High concentration of airborne dust resulting in deposition and damage to crops and water resources shall be avoided. The Contractor shall take every precaution to control excessive noise resulting in disruption to wildlife and human population.

Only controlled explosives methods shall be applied and used in construction works.

2.15 Reinstatement of Environment

The Contractor shall arrange and execute works as well as related activities in such a way that environmental conditions are reinstated. He may be required to carry out filling, removal and disposal works along with plantation of grass and trees as directed by the Engineer at his own costs at identified locations to reinstate environment.

Written instruction/approval shall be given by/sought from the Engineer regarding reinstatement of environment both during and after completion of works and up to the end of Defects Liability Period.

Measurement and Payment

No separate measurement and payment shall be made for the works described in this Clause.

2.16 Survey And Setting Out

- During the period of Commencement of works the Contractor shall survey the construction area and confirm the levels. He shall immediately notify the Engineer of any discrepancies and shall agree with the Engineer any amended values to be used during the contract, including replacements for any stations missing from the original stations.
- The Contractor shall check, replace and supplement as necessary the station points and agree any revised or additional station details with the Engineer.
- All stations and reference points shall be clearly marked and protected to the satisfaction of the Engineer.
- The Contractor shall establish working Bench Marks tied with reference stations soon after taking possession of the site. The coordinates and the elevations of the reference stations shall be obtained from the Engineer. The working Bench Marks shall be near all major/medium structure sites. Regular checking of these Bench Marks shall be made and adjustments, if any, got agreed with the Engineer and recorded.
- The Contractor shall be responsible for the accurate establishment of the centrelines based on the Drawing and data supplied. The centrelines shall be accurately referenced in a manner satisfactory to the Engineer. A schedule of reference dimensions shall be prepared and supplied by the Contractor to the Engineer.
- The existing profile and cross-sections shall be taken jointly by the Engineer and the Contractor. These shall form the basis for the measurements and payments. If in the opinion of the Engineer, design modifications of the centrelines and/or grade are advisable, the Engineer shall issue detailed instructions to the Contractor and the Contractor shall perform modifications in the field, as required, and modify the levels on the cross-sections accordingly.

2.18 As-Built Drawings

Such approved Working Drawings as have been selected by the Engineer shall be correctly modified for inclusion in the As-Built Drawings incorporating such variations to the Works as have been ordered and executed. Such drawings shall show the actual arrangement of all structures and items of equipment installed under the Contract. The Contractor shall submit 1 (one) reproducible copy and 3 (three) prints of all As-Built Drawings clearly named as such to the Engineer for approval before applying for the Taking-Over Certificate for the respective Section of the Works.

During the course of the Works, the Contractor shall maintain a fully detailed record of all changes from the approval to facilitate easy and accurate preparation of the As-Built Drawing. Irrespective of the other contractual prerequisites no Section of the Works will be considered substantially completed until the Engineer has approved the respective As-Built Drawings.

2.19 Photographs

The Contractor shall supply negatives and un-mounted positive colour prints of photographs, of such portions of the works in progress and completed, as may be directed by the Engineer. The negatives and prints shall not be retouched. The negative of each photograph shall be the property of the Employer and shall be delivered to the Engineer with prints. No prints from these negatives shall be supplied to anyone without the written permission of the Engineer.

2.20 Supply Of Video Records

The work consists of taking video film of important activities of the work as directed by the Engineer during the contract and editing them to a video film of playing time between 30 minutes and 180 minutes as directed by the Engineer. It shall contain narration of activities in English and/or Nepali by a competent narrator. The edition of the video film and the script shall be approved by the Engineer. The video records shall be of acceptable quality and the film shall be capable of producing colour pictures.

Measurement

The measurement for this item shall be by number of sets of edited master records supplied each with four copies thereof.

Payment

The contract unit rate shall include all expenses for making video films with the help of a professionally competent photographer, editing, narration and supplying the final edited master record along with four copies thereof.

3. Notes About Measurement And Payment

3.1 Measurement

Unless specified, all measurements shall be based on “Principals of Measurement (Int.) for works of constructions." The tolerances specified in these Specifications are for evaluation of accuracies only based on which the work shall be accepted or rejected. However, the measurement of the work performed within the limits of tolerances shall be the measurement of actual work done in place, if their dimensions are less than what have been specified or instructed by the Engineer. If the actual work done in place is more than what has been specified or instructed by the Engineer, but within the limit of tolerances, the measurement shall be the measurement of the work what has been specified or instructed by the Engineer.

3.2 Payment

Unless specified in the contract, the contract unit rates and/or prices for items as set out in the Bill of Quantities are the full and the final compensation to the Contractor for:

- Supply of all materials necessary to complete the item as per relevant specifications;
- Use of materials, labours, tools, equipment, machines and other resources as per need;
- All handling, packing charges and transportation;
- Cost of supervision, quality assurance, temporary and ancillary works;
- Site commissioning;
- Maintenance and making good;
- All duties and obligations as set out in the contract

- general works such as setting out, clearance of site before setting out and after completion of works
- the preparation of detailed work program
- providing samples of various materials proposed to be used
- the detailed Design and Drawing of temporary works
- testing of materials
- any other details as required by the contract
- cost of all operations like storing, erection, moving into final position, etc. necessary to complete and protect the work till handing over to the Employer;
- the cost for safeguarding the environment
- All incidental costs, not covered under above stated.

Where the Bill of Quantities does not include the items mentioned in this Section, no separate payment shall be made for such works. The costs in connection with the execution of the works specified herein shall be considered to be included in the related items of other works specified in the Bill of Quantities or shall be considered to be incidental to the works specified. Items specified in this Section and included in the Bill of Quantities shall be paid at the contract unit rates as agreed and shown in the Bill of Quantities.

3.3 National Specifications

Certain Specifications issued by various national or other widely recognized bodies are referred to in these Specifications. Such Specifications shall be defined and referred to as National Specifications.
The Contractor may propose that the materials and workmanship be defined in accordance with the requirements of other equivalent National Specifications and he may execute the works in accordance with such National Specifications as may be approved by the Engineer. A copy of the National Specification, together with its translation into the English language if the National Specification is in another language, shall be submitted to the Engineer along with the request for its adoption.

In referring to National Specifications, the following abbreviations are used:

NS	Nepal Bureau of Standards and Metrology
IS	Indian Standards
ASTM	American Society of Testing and Materials BS British Standards
BSCP	British Standard Code of Practice
ISO	International Organization for Standardization
EN	European Norm
NFP	French Norm

Along with the commencement of the contract, the Contractor shall provide in his site office at least one complete set of all National Specifications referred to in these Specifications, if they are for the Sections applicable to the works. This set shall be made available for use by the Engineer.

3.4 Equivalency of Standards

Wherever reference is made in these Specifications to specific standards and codes to be met by the materials, plant, and other supplies to be furnished, and work to be performed or tested, the

provisions of latest current edition or revision of relevant standards and codes in effect shall apply. Other authoritative standards which ensure a substantially equal or higher performance than the specified*,-standards and codes shall be accepted subject to the Engineer's prior review and approval. Differences between the standards specified and the proposed alternative standards shall be fully described by the Contractor and submitted to the Engineer at least 28 days prior to the date when the Contractor desires the Engineer's approval. In the event that the Engineer determines that such proposed deviations do not ensure substantially performance, the Contractor shall comply with the standards and codes specified. No payment shall be made for adoption of higher standards.

3.5 Units of Measurement, Abbreviations and Terminology:

Units of Measurement

The Symbols for units of measurement are used in these Specifications as they are given below.

M	micron = m x 10-6		
mm	millimetre		
m	meter		
km	kilometre		
sq. mm. or mm2 millimetre sq.m. or m2	square square meter		
sq. km. or km2	square kilometre		
	hectare	OPC	Ordinary Portland Cement
cu. m. or m3	cubic meter	PI	Plasticity Index
lit or I	litre	PL	Plastic Limit
rad	radian		
°C	degrees Celsius		
kg	kilogram		
g	gram = kgx10-3		
mg	milligram = kg x 10-6		
mg/l	milligram per litre		
t	ton = kg x 103		
kg/m3 meter	kilogram per cubic		
t/m3	ton per cubic meter		
N	Newton		
N/m2 meter	Newton per square		
Lin. m	Linear meter		
Max	Maximum		
Min	Minimum		

ACV	Aggregate Crushing Value
BOQ	Bill of Quantities
CR	Crushing Ratio
dia	Diameter
hr	Hour
LS	Linear Shrinkage
MC	Moisture Content
MDD	Maximum Dry Density
min	Minute
no	Number (units), as in 6 no.
No	Number (order) as in No 6
OMC	Optimum Moisture Content

Symbols of other units, if not covered above, shall be as per SI system set out in ISO 31/1.

Abbreviations

The following abbreviations are used in these Specifications.

PM	Plasticity Modulus (PI x % passing 0.425 mm sieve) POL Petrol, Oil & Lubricant
ROW	Right of Way
SE	Sand Equivalent
sec	Second
SG	Specific Gravity
SI	International Standard Units of Measurements
SSS	Sodium Sulphate Soundness test, loss on 5 cycles STV Standard Tar Viscosity
TS	Tensile Strength
UC	Uniformity Coefficient
UCS	Unconfined Compressive Strength VIM Voids in Mix
w/c	Water cement ratio
wt	Weight
%	Percent

Terminology

The term "the Specifications" shall be construed as the Standard Specification and the Special Specification all together.

6. Program

The Contractor shall provide all information needed for fulfilment of the program and required in accordance with the Conditions of Contract including the sequence in which he intends to work including implementation of quality assurance plan. If the Contractor requests a change in the sequence and such change is approved by the Engineer, the Contractor shall have no claim as per the Conditions of Contract for delay arising from such revisions to the program.

The program for the construction and completion of the works shall be established using CPM/PERT techniques or equivalent. The program shall be detailed enough to give, in addition to construction activities, detailed network activities for the submission and approval of materials, procurement of critical materials and equipment, fabrication of special products/equipments if any and their installation and testing, and for all activities of the Engineer that are likely to affect the progress of work. The Contractor shall update all activities in accordance with the Conditions of Contract on the basis of the decision taken at the periodic site review meetings or as directed by the Engineer.

The program shall also include the Contractor's general requirements for any road closures to be agreed in principle with the Engineer. Such agreement shall not relieve the Contractor of his responsibility to obtain specific approval for each closure or series of closures.

Any proposal for night working shall also be stated in the program.

7. QUALITY CONTROL

7.1 Scope

This Section covers the Quality Control System and procedures, Quality Assurance Plan, program of tests, trials, and general procedures for acceptance as well as Laboratory arrangements and related facilities which are required for the selection and control of the quality of materials and workmanship.

7.2 Contractor Responsible For the Quality of the Works

All materials incorporated and all workmanship performed shall be strictly in conformity with the requirements of the Specifications and the Contractor shall be responsible for the quality of the works in the entire construction within the contract.

The Contractor shall provide, use and maintain on the Site, throughout the period of execution of the contract, a Laboratory with adequate Laboratory equipment operated by competent staff for carrying out tests required for the selection and control of the quality of materials and for the control of workmanship in accordance with these Specifications. The list of Laboratory equipment to be procured and Laboratory facilities to be provided shall be this specification. The Contractor shall assume that tests shall be required on all materials to be used in the works and on all finished works or part of works.

7.3 Quality Control System

The Quality Control System comprises the methods, procedures and organization for the Quality Control of the works. The Contractor shall implement the Quality Control System in the following sequences:

a) Compliant testing for materials including Laboratory trials,
b) Compliant testing for methods and equipment prior to the commencement of the work, including site trials or trials sections,
c) Control testing during construction,
d) Acceptant testing on completed works or parts of the works.

The Contractor shall carry out all necessary tests and shall report to the Engineer the results of such tests before submitting materials and/or finished works or part of works to the Engineer for approval in accordance with this Specification. In certain circumstances, tests may be carried out at the place of manufacture as per the Conditions of Contracts.

For satisfying himself about the quality of the works, quality control tests shall be conducted by the Engineer himself or by any other agencies deemed fit by the Engineer. Additional tests may also be conducted where in the opinion of the Engineer such tests are needed.

Before commencement of the work, the Contractor shall demonstrate a trial run of all construction equipment for establishing their capability to achieve the laid down Specifications and tolerances to the satisfaction of the Engineer.

The supply, testing and monitoring shall be in compliance with a Quality Assurance Plan and the provisions in the contract.

7.4 Quality Assurance Plan

The Contractor shall submit to the Engineer for his approval, the Quality Assurance Plan (QAP) which shall be based on the detailed Program of the Works.

The Quality Assurance Plan shall include the following:

(1) The Quality Control Schedule Comprising of:
   a) The recapitulative test schedule and testing program detailing the list of tests for compliance, Laboratory trials, site trials and trials Sections, construction control tests and their frequencies, tests for acceptance of the completed works with their dates.
   b) Recapitulative list of "critical" acceptance testing procedures, for equipment or parts of the works which corresponds to the tasks on the Critical Path according to the construction Program.
   c) Estimate of the number of tests to be carried out, list and number of appropriate equipment to conduct them, list of tests to be conducted outside the site Laboratory , if any, identification of the outside Laboratory where proposed to carry out the test.
   d) List of staff assigned to the Laboratory, their position and responsibilities in the quality control procedures, their qualification and experience, general description and detailed organization of the Laboratory activities.

(2) The list of sources of materials and/or of manufactured articles, their main characteristics, their identification mode as provided by the supplier when required; the program of supply and procurement of material and/or manufactured articles in accordance with the Program.

(3) The list of tests and quality control procedures to be implemented by the Sub-contractors, if any, pointing out the "critical" acceptance testing procedures relating to the Sub- contracted works, which correspond to the tasks on the Critical Path included in the Sub- contracted works.

The Contractor shall implement the Quality Control in compliance with the approved QAP.

The Engineer's approval of the QAP shall not relieve the Contractor from his responsibility of the quality of the Works as per the Conditions of Contract and these Specifications nor shall the Engineer's approval of the QAP exempt the Contractor of any procedure to inform the Engineer in writing or request for the Engineer's approval or re-approval as specified in the Conditions of Contract and/or in these Specifications

The Contractor shall monitor and update the QAP on the basis of the decisions taken at the periodic review meetings or as directed by the Engineer and in accordance with the program of the works and the Conditions of Contract.

7.5 Testing Procedures And Set Of Tests

For ensuring the quality of the work, the materials and the workmanship shall be subjected to testing in accordance with procedures, sets of tests and frequencies as specified in respective Sections of these Specifications. The specified testing frequencies are not restrictive. The Engineer shall direct for the tests to be carried out as frequently as deemed necessary that the materials and workmanship comply with their Specifications.

Where no specific testing procedure is mentioned in the Specifications, the tests shall be carried out as per the prevalent accepted engineering practice or directions of the Engineer.

7.6

7.7 Laboratory Trials To Confirm Compliance With Specifications

Concrete

Laboratory trials for concrete mixes shall be carried out by the Contractor to demonstrate that the composition of the mixes proposed for the concrete meets the requirements of the Specifications.

The compositions of concrete mixes which meet the specified requirements and are accepted by the Engineer shall be then used in the site trials carried out.

7.6. Site Trials Or Trials Sections

7.6.1 Concrete

Site trials for concrete mixes shall be carried out by the Contractor to demonstrate the suitability of his mixing equipment. During the site trials, compliance with the Specifications for weighing equipment, storage of ingredients, means of transport for concrete, placing, compaction and curing shall be checked by the Engineer.

During the site trial a full scale sequence including placing and compaction of concrete shall be carried out on a part of the works which will represent particular difficulties due to the presence of reinforcement, obstructions or others.

The Contractor shall allow in his program for conducting the site trials and for carrying out the appropriate tests, including the time required to obtain compressive strength test results at 28 days. The Contractor shall inform in writing the Engineer at least two weeks before the date he proposes to use the concrete mixes in the site trials with all relevant data including the trial program, the results of the Laboratory trial tests for the proposed concrete mixes and compliance tests results of all constituents i.e. cement, aggregates, water and admixtures, if any.

7.6.2. Other Works and Equipment

Site trials for Pre-stressed Concrete Works, Painting of Structural Steelwork etc. are detailed in the relevant Sections of these Specifications.

Approval of the Engineer to a set of data recorded in a site trial shall not relieve the Contractor of his responsibilities to comply with the requirements of these Specifications

7.6.3. Control Testing During Construction

Quality Control procedure are detailed in the relevant Sections of these Specifications

7.6.4. Acceptance Tests For Completed Works Or Part Of Works

Acceptance tests for other works and equipment are detailed in the relevant Sections of these Specifications.

7.6.5. Recapitulative Schedule Of Tests

The tests to be carried out and their frequency for the quality control of the works are detailed in the relevant Sections of these Specifications.

The following Table recapitulates the testing schedule for the main types of works.

7.6.6. Testing Schedule

Partor componentof theworks	Tests	Frequency

Concrete Materials	cement: acceptance tests: Control tests: chemical composition physical properties aggregates: acceptance tests: Control tests: Grading Silt & clay content Organic impurities Chloride content, sulphate content, Alkali reactivity water, admixtures	Conservative samples for each supply and not less than every 200t or part of it. testing in case of non compliance of the mixes or storage on site for longer than 1 month each delivery and every 100 t or part of it for fine aggregate and 250 t or part of it for coarse aggregate As frequently as required.
	Concrete • lab. Trials • site trials • control tests compressive strength	early works: every 6 m3 of each class. When compliance is established: every 20 m3 or part of it.
	Reinforcement:	
Brickworksfor structures Materials mortar	quality of bricks quality of cement and sand control tests compressive strength of mortar	as required every 10 m3of brick work or part of it.
Masonryfor structures materials Mortar	quality of cement and sand control tests compressive strength of mortar dismantling of masonry (1 m_1 m)	as required every 10m3 of masonry of part of it every 30m3 of masonry or part of it

7.07. Contractor's Laboratory

(1) Laboratory Building

The Contractor shall on his own make provide and maintain a site Laboratory. Such Laboratory shall have a minimum total area of 60 m2 appropriately partitioned to house various Laboratory instruments/equipment, office, store, and toilet. It shall have adequate electrical connections (power plugs, switches) necessary to operate the equipment in the Laboratory.The Laboratory shall either be any existing building at site, rented and modified to suit the purpose or shall be a shed constructed of GI sheets and pipes/angles. The floor of the Laboratory shall however be of 100 mm M15/20 concrete and the minimum height

2.7 m. The Contractor shall submit the design of the GI shed for approval of the Engineer prior to its construction.
Alternatively, it may also be constructed from shipping containers modified suitably to the Engineer's satisfaction for the purpose.

This Laboratory shall be part of the Temporary Works and will be the property of the Contractor on completion of the Works.

(2) Measurement

Measurement for the provision of site Laboratory will be on a monthly basis.

(3) Payment

Payment for work will be made on the basis of contract unit price indicated in the BOQ. Payment for the works shall be full and final compensation for all material, labour, and equipment (including land rent if any) to complete the works as specified.

7.08. Laboratory Equipment at Site

The equipment for the site Laboratory and field control tests shall be provided, installed, operated and maintained by the Contractor. The equipment, material, chemical reagents may also be used by the Engineer to conduct tests according to his Quality Check Plan. Testing frequency (both Laboratory and field control) shall be developed in the Quality Assurance Plan of the Contractor and Quality Check Plan of the Engineer. After the completion of the Works, the Laboratory equipment shall become the property of the Contractor. Laboratory and field control equipment anticipated for the Works are listed in following Tables.

Measurement and Payment

Measurement and Payments for the work will be made in relevant monthly statement on the basis of lump sum price quoted in the BOQ. It shall be paid in the following manner:

- 50% after installation of the equipment in the site Laboratory to the satisfaction of the Engineer and
- the remaining 50% after 80% completion of the Works.

7.9. Laboratory Equipment/Field Control Testing Apparatus For Cement Masonry And Concrete Works

S.No.	Designation	Quantity
1.	Slump Cone with Base and Graduated Tamping Rod	2 Sets
2.	Heavy Duty Concrete Cube Moulds, 150 mm cubes, with Base	12 Sets
3.	Concrete Cube Crushing (set) Machine with Spherically Seated Block and Platens for Mortar Test	1 Set
4.	Mortar Flow Apparatus with Cone	2 Sets
5.	Vicat Apparatus	1 Set
6.	Standard Sieves for Aggregate	2 Sets
7.	Electric Oven	1 Set

7.10. Sampling and Testing of Material away From Site

Some tests on construction material shall be conducted periodically off the site at reputable institutions in Kathmandu as directed by the Engineer.

The frequency of tests shall be developed in the Quality Assurance Plan that shall also prescribe test results and reporting formats. However, some details on the tests are listed tentatively below.

7.11 List Of Tests To Be Conducted Off-Site Tests

(Locations subject to the approval of the Engineer)

S.No.	Description of Tests
1.	UTM Tensile Test for Re-bar
2.	Zinc Coating and Tensile test of GI wire
3.	Los Angeles Abrasion Test for Aggregate
4.	UTM tensile Test for Anchor Bar
5.	Specific Gravity of Aggregates

The tests listed above are subject to the Contractor's Quality Assurance Plan approved by the Engineer. The Engineer shall also determine the number of tests while executing the Works.

The Contractor shall keep records of all tests in a format approved by the Engineer. Two copies of any test results shall be forwarded to the Engineer.

Measurement

Measurement of work under this Clause shall be in number of tests fully executed to the satisfaction of the Engineer.

7.12. Payment

Payment will be made from the Provisional Sum set aside for the purpose and shall be full and final compensation for all material, labour, and equipment to complete the works as specified.

7.13. Survey and Setting

All traverse stations and reference points shall be clearly marked and protected to the satisfaction of the Engineer.

The Contractor shall provide the Engineer with all necessary assistance for checking the setting out, agreement of levels and any other survey or measurement which the Engineer needs to carry out in connection with the Works during the entire period of Contract. Such assistance shall include:

- Provision of suitably qualified surveyors to work under the direction of the Engineer as required.
- Provision of all necessary support for these surveyors including assistants, chainmen, labour, survey equipment (thedolite, levels, etc.), hand tools, pegs, and other incidental material.

The survey equipment shall be of the quality approved by the Engineer.

7.14 Use of the Contractor's Temporary Works

Unless otherwise specified under the Contract, the Contractor shall allow the Employer, the Engineer or the Nominated Subcontractor the use of temporary access, crossings and other Temporary Works at site insofar that such use is related with the Works.

7.15. Day work

Day work shall mean provisional sum payable to the Contractor for works executed on a daily or hourly basis as instructed in writing by the Engineer. This item is categorized in three groups namely:

(i) Labour
(ii) Equipment
(iii) Material

The Engineer however shall have the right to obtain further information on the rates and if appropriate to negotiate changes in the rates or demand new prices for additional equipment, staff, or material before or after the award of the Contract.

The Engineer shall have the right to calculate new prices for Day work on the basis of rate analysis.

The hourly or daily rates of labour or equipment and the unit price for material submitted by the Contractor shall deem to cover all expenses and shall be inclusive of overhead, taxes, and profit.

Non-working hours or idle time/down time of labour and equipment respectively shall not be considered for payment.

7.16 Reports

The Contractor shall prepare and submit four copies of Progress Report on a monthly basis. The Reports shall highlight the targeted and achieved progress, problems at site, and brief description of the claims during the month and the Engineer's response, and other information relevant to the Project. It shall be supplemented with necessary charts, tables, data, and at least 36 photographs.

On completion of the Works, the Contractor shall prepare and submit a Completion Report that shall deal comprehensively on all aspects covered in the Monthly Report. Additional information such as improvement in construction methods/techniques, lessons learnt from the Project, important considerations for maintenance, etc. should also be highlighted.

7.17. Site Diary

The Contractor shall keep Site Diaries wherein full details of the work carried out during each day shall be fully recorded. The diaries shall be available for inspection by the Engineer any time during normal office hours. The Site Diaries shall include:

- Weather Conditions, rainfall/snowfall, and river water level
- Description, quantity, and location of work performed
- Shifts and working hours
- Number and category of workers working at site
- Plant in use and idle, or broken down
- Test carried out and results
- Inspection carried out by the Engineer
- Site instructions
- Visitors
- Accidents

7.18 Measurement and Payment

The cost for these works shall be covered by the Contractor's overhead included in unit rates of other items in the BOQ.

8. MATERIALS AND TESTING OF MATERIALS

8.1 Quality Of Materials

The materials supplied and used in the works shall comply with the requirements of these Specifications. They shall be new, except as provided elsewhere in the contract or permitted by the Engineer in writing. The materials shall be manufactured, handled and used skilfully to ensure completed works to comply with the contract.

8.2. Sources Of Materials

The use of any one kind or class of material from more than one source is prohibited, except by written permission of the Engineer. Such permission, if granted, shall set forth the conditions under which the change may be made. The sources or kinds of material shall not be changed without written permission of the Engineer. If the product of any source proves unacceptable, the Contractor shall make necessary arrangements for the supply of acceptable material. Any claims for compensation associated with such arrangements or changes shall not be considered, unless the source of the unacceptable material is designated in the contract as a source of material.

When any manufactured product, either new or used, is to be furnished by the Employer, the location at which such material shall be delivered to the Contractor shall be designated in the contract. In such cases, the Contractor shall haul the materials from the designated delivery point to the point of use. The compensation for such hauling shall be included in the contract unit rate for placing the materials in the finished work.

8.3. Inspection And Acceptance Of Materials

Final inspection and acceptance of materials shall be made only at the site of the work. The Engineer reserves the right to sample, inspect, and test the materials throughout the duration of the works and to reject any materials which are found to be unsatisfactory.

A preliminary inspection of materials may be made at the source for the convenience and accommodation of the Contractor, but the presence of a representative of the Engineer shall not relieve the Contractor of the responsibility of furnishing materials complying with their Specifications.

The representative of the Engineer shall have free entry at all times to those parts of any plant which concern production of the materials ordered.

8.4 Materials And Manufactured Articles

(1) Order for Materials and Manufactured Articles

The Contractor shall, before placing any order for materials and manufactured articles for incorporation in the Works, submit to the Engineer the names of the firms from whom he proposes to obtain such materials and manufactured articles, giving for each firm a description of the materials and manufactured articles to be supplied, their origin, the manufacturer's specification, quality, weight, strength and other relevant details. The Contractor shall submit the samples of such materials and manufactured articles when requested by the Engineer and when appropriate, manufacturer's certificates of recent test carried out on similar materials and manufactured articles shall also be submitted.

(2) Storage

All materials and manufactured articles shall be stored on site in a manner acceptable to the Engineer. The Contractor shall carefully protect all work, materials and manufactured articles from the weather and vermin.

(3) Test Certificates

When instructed by the Engineer, the Contractor shall submit to him all Test Certificates from the suppliers/manufacturers of the materials and/or manufactured articles to be used for the contract. Such certificates shall certify that the materials and/or manufactured articles concerned have been tested in accordance with the requirements of these Specifications. All Test results shall be enclosed along with such certificates. The Contractor shall provide adequate means of identifying the materials and/or manufactured articles delivered on the site with the corresponding certificates.

8.5. Defective Materials

All materials not conforming to the requirements of the contract shall be rejected whether in place or not. They shall be removed immediately from the site unless otherwise permitted by the Engineer. Even after rectification of the defects no rejected material shall be used in the work unless approved by the Engineer in writing. Upon failure of the Contractor to comply promptly with any order of the Engineer given under this Clause, the Engineer shall have authority to cause the removal and replacement of rejected material and to deduct the cost thereof from any monies due to the Contractor.

8.6. Trade Names And Alternatives

For convenience in designation in the contract, certain articles or materials to be incorporated in the work may be designated under a trade name or the name of a manufacturer and his catalogue information. The use of an alternative article or material which is of equal or better quality and of the required characteristics for the purpose intended shall be permitted, subject to the following requirements:

(1) The proof as to the quality and suitability of alternatives shall be submitted by the Contractor. He shall also furnish all information necessary as required by the Engineer. The Engineer shall be the sole judge as to the quality and suitability of alternative articles or materials and his decision shall be the final and binding upon the Contractor.

(2) Whenever the specifications permit the substitution of a similar or equivalent material or article, no tests or action relating to the approval of such substitute material shall be made until the request for substitution is made in writing by the Contractor accompanied by complete data as to the equality of the material or article proposed. Such request shall be made well in advance to permit approval without delaying the work.

8.7. Foreign Materials

Materials which are manufactured, produced or fabricated outside Nepal shall be delivered at a point in Nepal as specified in the contract where they shall be retained for a sufficient time to permit inspection, sampling, and testing. The Contractor shall not be entitled to an extension of time for acts or events occurring outside Nepal and it shall be the Contractor's responsibility to deliver materials obtained from outside Nepal to the point of delivery in Nepal. The Contractor shall supply the facilities and arrange for testing required at his own cost. All testing by the Contractor shall be subject to witnessing by the Engineer.

The Contractor shall furnish to the Engineer a "Certificate of Compliance" with the specifications

from the manufacturer, producer or fabricator of foreign material where required. In addition, certified mill test reports clearly identifiable to the lot of material shall be furnished where required in these Specifications or otherwise requested by the Engineer. Where structural materials requiring mill test reports are obtained from foreign manufacturers, such materials shall be furnished only from those foreign manufacturers who have previously established, to the satisfaction of the Engineer, the sufficiency of their in-plant quality control, as deemed necessary by the Engineer or his representative, to give satisfactory assurance of their ability to furnish material uniformly and consistently in conformance with their Specifications. At the option of the Engineer, such sufficiency shall be established whether by submission of detailed written proof thereof or through in-plant inspection by the Engineer or his representative.

If the welding of steel for structural steel members or the casting and pre-stressing of pre-cast pre-stressed concrete members is to be performed outside of Nepal, the following requirements shall apply:

(1) Such fabrication shall be performed only within the plants and by fabricators who have previously established, to the satisfaction of the Engineer, that they have the experience, knowledge, trained manpower, quality control, equipment and other facilities required to produce the quality and quantity of the work required. At the option of the Engineer, prequalification of the plant and fabricator shall be established either by the submission of detailed written proof thereof or through in-plant inspection by the Engineer or his representative, or both.

(2) The Contractor shall make written application to the Engineer for approval for such foreign fabrication at the earliest possible time and in no case later than 60 calendar days in advance of the planned start of fabrication. The application shall list the specific units or portion of a work which shall be fabricated outside of Nepal.

(3) The Contractor shall advise the Engineer, in writing, at least 20 calendar days in advance of the actual start of any such foreign fabrication.

(4) All documents pertaining to the contract, including but not limited to, correspondence, tender documents, working drawings and data shall be written in the English/Nepali language and all numerical data shall use the metric system of units of measurement.

8.8. Definition of General Types of Materials

The following definitions shall apply to materials in this Section and other relevant Sections.

(1) "Topsoil" shall mean the top layer of soil that can support vegetation. It shall include all turf acceptable for turfing.

(2) "Suitable Material" shall comprise all that is acceptable in accordance with the contract for

use in the works {and which is capable of being compacted to form a stable fill having side slopes as indicated in the Drawing. The material used in fill (except rock fill) shall not contain rock fragments with dimensions of more than 75 mm.}

(3) "Unsuitable Material" shall mean other than suitable material and shall include:

(a) Material from swamps, marshes or bogs;
(b) Peat, logs, stumps, perishable material, organic clays;
(c) Material susceptible to spontaneous combustion;
(d) Material in a frozen condition;
(e) Clay of liquid limit exceeding 70 and/or plasticity index exceeding 45.

Materials stated above in d), if otherwise suitable shall be classified suitable when unfrozen.

(4) "Well Graded Granular Material" consisting of gravel and/or sand shall conform to relevant Clause.

(5) "Rock fall", coarse alluvial material shall be loose soils such as moraines, debris, or alluvial material containing large blocks or large boulders. Individual blocks or boulders of hard materials greater than 0.3m3 each in volume, shall be classified as hard material.

(6) "Hard Material" shall mean any material which conform to the requirements of relevant Sub-clause.

8.9. Sieves

IS sieves shall be used for all tests. Based on IS-460 the standard sieves series shall be as follows:

125; 90; 75; 63; 50; 45; 40; 37.5; 31.5; 25; 22.4; 20; 19; 16; 12.5; 11.2; 10; 9.5; 8; 6.3 ;5.6; 4.75;

4.00; 2.8; 2.36; 2; 1.7; 1.4; 1.18; 1; 0.85; 0.71; 0.6; 0.5; 0.425; 0.400; 0.300; 0.250; 0.212; 0.180;

0.150; 0.125; 0.090; 0.075 mm.

8.10. Soils And Gravels

8.10.1. Sampling and Samples

Sampling of soils and gravels shall be carried out as specified or as directed by the Engineer. Samples shall be prepared for testing as indicated in IS 2720 part I, except that:

a) The mass (in g) of a sample required for sieve analysis is about 400D, D being the maximum particle size (mm).
b) Sample containing particles larger than 19 mm size shall be prepared for compaction and CBR tests as described hereunder, provided the proportion in weight of such particles is less than 30% :

An adequate quantity of representative material shall be sieved over the 50 mm and 19 mm sieve. The material passing the 50 mm sieve and retained on the 19 mm sieve shall be weighed and

replaced with an equal mass of material passing the 19 mm sieve and retained on the 4.75 mm sieve. The material for replacement shall be taken from the remaining portion of the main sample. When preparing gravel samples, the aggregations of particles shall be broken with a wooden or rubber hammer or pestle. Care shall be taken that no individual particles are crushed in the operation.

8.10.2. Standard Methods of Testing

Tests on soils and gravels shall be performed in accordance with the standard methods given in Table below:

Tests Procedures Applicable to Disturbed/Undistributed Samples of Soils and Gravels

	Tests		Test procedure
Determination of:			
i)	Moisture Content	IS 2720	Part 2 (Oven-drying method)
ii)	Liquid Limit	IS 2720	Part 5 (Cone Penetrometer or by Casagrande Apparatus)
iii)	Plastic Limit	IS 2720	Part 5
iv)	Plasticity Index	IS 2720	Part 5
v)	Linear Shrinkage	IS 2720	Part 20
vi)	Specific Gravity of Particles	IS 2720	Part 3
vii)	Particle Size Distribution	IS 2720	Part 4
viii)	Organic Matter Content	IS 2720	Part 22 '
ix)	Total Sulphate Content	IS 2720	Part 27
x)	pH Value	IS 2720	Part 26 (Electrometric Method)
xi)	Mica Content	-	Manual mineralogical counting
xii)	Density-Moisture Content	IS 2720	Part 7
	relationship (2.5 kg rammer)		
xiii)	Density-Moisture Content relationship (4.9 kg rammer)	IS 2720	Part 8
xiv)	California Bearing Ratio	IS 2720	Part 16
xv)	Sand Equivalent	IS 2720	Part 37 (Mechanical Shaker or Manual Shaker method)
xvi)	Field Dry Density	IS 2720	Part 28/Part 29
xvii)	Unconfined compression test	IS2720	Part 10
xviii)	Consolidation test	IS2720	Part 15
xix)	Direct shear test	1S2720	Part 13
xx)	Triaxial test	IS2720	Part 11,12
xxi)	Hydrometer analysis	IS 2720	Part 4
xxii)	Vane shear test	IS 2720	Part 30

It is further specified that:

a) Wherever in the text of these Specifications and the Special Specification the term "x% of the MDD (IS 2720 Part 27 or IS 2720 Part 28) is used it shall mean that a standard of compaction shall be achieved such that the dry density of the compacted material is x% of the maximum dry density determined from the respective tests mentioned in Table 6.4. Samples for the compaction tests shall be taken before compaction of the

layers begins unless in the opinion of the Engineer the compactive effort proposed or applied by the Contractor is such that the material characteristics have changed in which case the samples for the tests shall be taken after all compaction is complete.

b) Compaction tests: when the material is susceptible to crushing during compaction, a separate and new sample shall be used in the determination of each point on the moisture/density curve.

c) The dry density of material placed in the works shall be determined by the Sand Replacement Method unless the Engineer directs to use a nuclear method or other method. In the case of nuclear method, tests shall be done at least at the same frequency required when using the Sand Replacement Method, but at each nuclear densometer test location the average of three readings taken at positions rotated by 90° shall be used. A check/comparison test using the Sand Replacement Method shall be carried out at 10 test interval.

Initial calibration of the nuclear density testing equipment shall be done by carrying out at least fifty tests in parallel with the Sand Replacement Method for each different material encountered. The check tests shall be used to update the initial calibration of the nuclear density testing equipment.

8.11. Stone, Aggregate, Sand And Fillers

(1) Sampling and Preparation of Samples

Sampling shall be carried out as per ASTM-D75 and the samples shall be prepared in accordance with IS 2386 or according to sampling procedures specified for the Standard Methods of testing given in following Table.'

(2) Standards Methods of Testing

Tests on stone, aggregate, sand and filler shall be performed in accordance with the standard procedures given in the following tables.

Tests Procedures Applicable to Stone Aggregate and Fillers'

	Tests	**Test Procedure**	
	Determination of:		
i)	Particle Size Distribution (Gradation)	IS 2386	Parti
ii)	Clay, Silt, Dust in Aggregates	IS 2386	Part 2
iii)	Flakiness index	IS 2386	Part
iv)	Specific Gravity	IS 2386	Part 3
v)	Moisture Content	IS 2386	Part 3
vi)	Bulk Density, Voids & Bulking	IS 2386	Part 3
vii)	Soluble Chloride Content	BS812	Part 117
viii)	Mica Content	Manual mineralogical counting	
ix)	Water Absorption	1S2386	Part 3
x)	Crushing Ratio	Manual counting &	weighing
xi)	Los Angeles Abrasion	IS 2386	Part 4

xii)	AIV - ACV	IS 2386	Part 4
xiii)	Polished Stone Value	IS 2386	Part 4
xiv)	Degradability Test	NFP94-067	
xv)	Sodium Sulphate Soundness	IS 2386	Part 5
xvi)	Alkali Aggregate Reactivity Test	IS 2386	Part 7
xvii)	Deleterious Substances	IS 2386	Part 2
xviii)	Sand Equivalent	IS 2720	Part 37
xix)	Crushing Strength of stone	IS 2386	Part 4

8.12. Cement

Ordinary and High Strength Portland Cement (OPC and HSPC), Portland Slag Cement (PSC), Portland Pozzolana Cement (PPC) shall be sampled according to IS 3535 and tested according to IS 4031.

Chemical and physical requirements for Ordinary Portland Cement, High Strength Portland Cement, Portland Slag Cement and Portland Pozzolana Cement shall be in accordance with IS 269, IS 8112, IS 12269, IS 455, IS 1489 respectively.

The requirements on their physical characteristics shall be:

8.12.1. Requirements on the Physical Characteristics of Cement

S.N.	Physical characteristics	OPC/PSC	HSPC	Test Procedure
i)	Fineness, m2/kg: (by Blaine's Air Permeability method)	225	225	IS-4031 Part 2
ii)	Setting Time:			
	(a) Minimum Initial Setting Time (minutes)	45	45	IS 4031 Part 5
	(b) Maximum Final Setting Time (minutes)	600	600	
iii)	Soundness by Lechatelier method, mm, maximum	10	10	IS 4031 Part 3
iv)	Compressive Strength:			IS 4031 Part 6
	Minimum Average Compressive Strength of three mortar cube(N/mm2)			
	(a) 3 days	22	27	
	(b) 7 days	29	37	
	(c) 28 days	43	53	

8.13. Lime

Limes shall be sampled and tested in accordance with BS 890 and shall comply with all requirements specified therein.

Lime for treatment shall be Hydrated Calcium Lime or Quicklime and, unless otherwise specified,

shall comply with the requirements given in Table below:

8.13.1. Requirements of Lime for Treatment

S. No.	Characteristics	Hydrated lime	Quicklime
i)	Fineness Residue on 0.212 mm sieve - Maximum Residue on 0.075 mm sieve – Maximum	1% 10%	10% 50%
>i)	Chemical requirements Free lime content - Minimum Hydrated lime content - Maximum	50%	60% 5%

8.13.2. Lime Treated Materials

(1) Sampling

Sampling and preparation of samples of lime treated material shall be carried out as specified or as instructed by the Engineer except that:

Samples containing particles larger than 19 mm shall be prepared for compaction and CBR tests. (The fraction coarser than 19 mm shall be replaced by an equal weight of material passing through 19mm sieve and retained on 4.75 sieves).

(2) Standard Methods of Testing

The tests on lime treated materials shall be performed in accordance with the Standard methods:

Additional Tests Procedures Applicable to Lime Treated Materials

Tests	Test Procedure
Determination of: (i) Unconfined Compressive Strength (UCS) (ii) Effect of immersion on UCS (iii) Lime Content	 BS1924-Part2 BS 1924 -Part 2 BS 1924-Part 2

8.14. Concrete

Sampling and testing on concrete shall be carried out in accordance with the standard methods given:.

8.14.1. Tests Procedures Applicable to Concrete

S.No.	Tests	Test Procedures
	Determination of:	
(i)	Air contents of fresh concrete	BS 1881-106
(ii)	Density of hardened concrete	BS 1881-114
(iii)	Compressive strength of concrete cubes	BS 1881-116
(iv)	Tensile splitting strength	BS 1881-117
(v)	Flexural strength	BS 1881-118

(vi)	Compressive strength of concrete cores	BS 1881-120
(vii)	Water absorption	BS 1881-122
(viii)	Mixing and sampling fresh concrete in laboratory	BS 1881-125
(ix)	Normal curing of test specimens (20° C method)	BS 1881-111
(x)	Accelerated curing of test specimens	BS 1881-112
(xi)	Making test cubes from fresh concrete	BS 1881-108

8.14.2. Non-destructive Tests Applicable to Concrete

S.No.	Tests	References to Test Procedures
(i)	Method of testing hardened concrete for other than strength	BS 1881-5
(ii)	Guide to the use of non destructive methods of test for hardened concrete	BS 1881-201
(iii)	Recommendation for surface hardened testing by rebound hammer	BS 1881-202
(iv)	Recommendation for measurement of velocity of ultrasonic pulses in concrete	BS 1881-203
(v)	Recommendation on the use of electromagnetic cover meters	BS 1881-204
(vi)	Recommendation for the assessment of concrete Strength by near to surface tests.	BS 1881-207

The test specimens shall be cured at a temperature of 27°C ± 2°C. Water to be used in concrete shall be tested as specified in BS 3148.
The total chloride content, expressed as chloride ion, arising from all ingredients in a mix including cement, water and admixtures shall not exceed the following limits, expressed as a percentage of the weight of cement in the mix :-
For pre-stressed concrete, steam cured concrete or concrete containing sulphate resisting or super-sulphated cement: 0.1 per cent

For any other reinforced concrete : 0.4 per cent

The total sulphate content expressed as SO3 of all the ingredients in a mix including cement, water and admixtures shall not exceed 0.4 per cent by weight of the aggregates or 4.0 per cent of the weight of the cement in the mix, whichever is the lesser.

8.15. Reinforcing Steel

All reinforcement for use in the Works shall be tested in a Laboratory acceptable to the Engineer and two copies of each test certificate shall be supplied to the Engineer. The sampling and frequency of testing shall be as set out in the NS 84-2042 and NS 191-2045. In addition to the testing requirements described above, the Contractor shall carry out additional testing as instructed by the Engineer.

8.15.1. Testing Of Welds

(1) The tests shall be carried out by the methods described in BS 709. The following requirements shall also be met with.

(a) General

In any respect the test results of welded joints shall not be inferior to the British Standard test requirements for the parent material.

(b) Procedure Trials

(i) Tensile and Bend Test

Should any one of the weld joint pieces selected for transverse tensile and transverse and longitudinal bend test fail to comply with the requirements applicable to the parent metal of the joint, 2 additional test pieces shall be taken from the joint material represented by the test. Both the test pieces shall comply with the requirements in order to qualify for the acceptance.

(ii) Charpy V-notch Tests

Should the average impact value obtained from any set of 3 Charpy V-notch tests on specimens fail to comply with the requirements, 3 additional test pieces from the same sample shall be tested. The average of the 6 test results shall comply with the test requirements in order to qualify for acceptance.

(iii) Revised Procedures

In the event of failure to meet the requirements, the Contractor shall carry out further trials, using revised procedures, and further tests to the satisfaction of the Engineer.

(c) Production Tests

(i) Tensile and Bend Tests

Should any one of the weld joint test pieces selected for transverse tensile and transverse bend tests fail to comply with the test requirements applicable to parent metal of the joint represented by the test, additional specimens shall be taken from the same production test plates and the test shall be repeated. Should any of the additional tests fail to comply with the requirements, the joint shall be rejected.

(ii) Charpy V-notch Tests

Should the average impact value obtained from any set of 3 Charpy V-notch specimens selected fail to comply with the test requirements, 3 additional test pieces from the same production test plates shall be tested. Should the average of the 6 results fail to comply with the test requirements the joint shall be rejected.

(iii) Re-welding and Re-Testing

In the event of failure to meet the test requirements the welded joint represented by the tests shall be completely cut out. The joint shall then be re-welded and the test repeated.

(iv) Non-destructive Testing

A method of non-destructive testing agreed with the Engineer shall be used for the examination of butt welds in tension members.

8.16. Paints For Structural Steelwork

The Contractor shall submit the proposal to the Engineer about the paint system to be used in the Works.

The system shall be defined at least by the following information, supported by the paint manufacturer's data sheets:

- Type of system, composition of each component,
- Minimum thickness of each coat,
- Drying time at 10°C and 20°C within a range a relevant hygrometric conditions, including handling conditions, minimum and maximum time of overlap,
- Type of painting method and thinner content, (airless spray, brush, roller etc.)
- Thinner type,
- Blending ratio,
- Maximum time limit of use, by 75% of relative humidity and for a relevant range of temperature and hygrometric conditions,
- Ripening time for a relevant range of temperatures and at least for 20°C and 30°C.
- Weather conditions constraint for painting and drying, including minimum and maximum ambient temperature and temperature of surfaces to be painted.

8.17. Bricks

Bricks shall conform to NS-1-2035 with the exceptions specified

8.18. Mortar

Mortar shall comply with relevant Sub-clause.

8.19. Reinforced Concrete Pipes

Reinforced concrete pipes shall comply with the requirements of NS 80-2042/IS 458:1988.

8.20. Geo textiles

Geo textiles used shall be made of polyethylene or polypropylene or polyester or similar fibres, either woven or non-woven. Unless otherwise shown on the Drawing, the geo textiles shall:

a) sustain a load of not less than 10 kN/m at break and have a minimum failure strain of 10 percent when determined in accordance with BS: 6906 or shall have a grab tensile strength more than 0.4 kN/m and grab elongation corresponding to this limit in accordance with ASTM D4632.

b) have apparent opening size as shown on the Drawing. If no size is shown on the Drawing, then the apparent size shall be 0.1 mm.

c) allow water to flow through it at right angles to its principal plane, in either direction at a rate of not less than 50 liters/sq.m./sec. under a constant head of 100 mm, determined in accordance with BS: 6906 (Part 3) or ASTM D4491, unless otherwise shown on the Drawing. The flow rate determined in the test shall be corrected to that applicable to a temperature of 15°C using data on variation in viscosity of water with temperature

d) have a minimum puncture resistance of 200 N when determined in accordance with ASTM D 4833.

e) have a minimum tear resistance of 350 N when determined in accordance with ASTM D 4533. Geo textiles used for drilled sub-surface drains shall be as specified

9. CONCRETE WORK

9.1. Definitions

Structural concrete is any class of concrete which is used in reinforced, pre-stressed or un-reinforced concrete construction which is subject to stress.

Non-structural concrete is composed of materials complying with the Specification but for which no strength requirements are specified and which is used only for filling voids, blinding foundations and similar purposes where it is not subjected to significant stress.

A pour refers to the operation of placing concrete into any mould, bay or formwork, etc. and also to the volume which has to be filled. Pours in vertical succession are referred to as lifts.

9.2. Materials For Concrete

(1) General

The Contractor shall submit to the Engineer full details of all materials which he proposes to use for making concrete. No concrete shall be placed in the works until the Engineer has approved the materials of which it is composed. Approved materials shall not thereafter be altered or substituted by other materials without the consent of the Engineer.

(2) Cement

Cement shall be free flowing and free of lumps. It shall be supplied in the manufacturer's sealed unbroken bags or in bulk. Bagged cement shall be transported in vehicles provided with effective means of ensuring that it is protected from the weather.

Bulk cement shall be transported in vehicles or in containers built and equipped for the purpose.

Cement in bags shall be stored in a suitable weatherproof structure of which the interior shall be dry and well ventilated at all times. The floor shall be raised above the surrounding ground level not less than 30cm and shall be so constructed that no moisture rises through it.

Each delivery of cement in bags shall be stacked together in one place. The bags shall be closely stacked so as to reduce air circulation with min gap of 500mm from outside wall. If pallets are used, they shall be constructed so that bags are not damaged during handling and stacking. Stack of cement bags shall not exceed 8 bags in height. Different types of cement in bags shall be clearly distinguished by visible markings and shall be stored in separate stacks.

Cement from broken bags shall not be used in the works. Cement in bags shall be used in the order

in which it is delivered.

Bulk cement shall be stored in weather proof silos which shall bear a clear indication of the type of cement contained in them. Different types of cement shall not be mixed in the same silo.

The Contractor shall provide sufficient storage capacity on site to ensure that his anticipated program of work is not interrupted due to lack of cement.

Cement which has become hardened or lumpy or fails to comply with the Specification in any way shall be removed from the Site.

All cement for any one structure shall be from the same source as far as possible.

All cement used in the works shall be tested by the manufacturer. The manufacturer shall provide the results of tests as given in following tables for each supply and for the last six months of his production. The Contractor shall supply two copies of each certificate to the Engineer.

9.2.2.1. Test Results For Chemical Composition Of Cement

Compounds %		Mean	Min	Max.	Standard deviation
Lime	CaO				
Silica	SiO2				
Alumina	Al2O3				
Iron Oxide	Fe2O3				
Magnesia	MgO				
Sulphur Trioxide	So3				
Soda, Potash	Na2O,K2O				

9.2.2.2. Test Results for Physical Properties of Cement

Characteristics	Requirements	Nominal	Mean	Min	Max	St. Dev.
Fineness, M2/KG : (by Blaine's Air Permeability Method)	225					
Minimum Setting time (initial), Min	45					
Maximum Setting time (final), Min	600					
Soundness (by. Le Chatelie method) mm, maximum	10					

Minimum Average Compressive Strength of three mortar cubes, (N/mm2) 3 days						
7 days	27*					
28 days	37*					
	53*					

*denotestherequirements ofHigh Strength Portland cement.

Each set of tests carried out by the manufacturer on samples taken from cement which is subsequently delivered to site shall relate to no more than one day's output of each cement plant.
The Contractor shall constitute, from each delivery and each type of cement and not less than one samples for every 200 tons or part of it, representative samples to be tested when instructed by the Engineer in a laboratory acceptable to him, in case of the concrete mixes do not comply with the requirements of this Specification.

Cement which is stored on site for longer than one month shall be tested in such laboratory for every 200 tons or part thereof and at monthly intervals thereafter.

The Contractor shall keep full records of all data relevant to the manufacture, delivery; testing and the cement used in the works and shall provide the Engineer with two copies thereof.

(3) Fine Aggregate

Fine aggregate shall be clean hard and durable and shall be natural sand, crushed gravel sand or crushed rock sand complying with IS 383. AH the material shall pass through a

4.75 mm IS sieve and the grading shall be in accordance with IS 383. In order to achieve an acceptable grading, it may be necessary to blend materials from more than one source. The deviation from the initial fineness modulus shall be no more than ± 0.30 for ordinary concrete and ± 0.20 for high quality concrete.

However, in respect of the presence of deleterious materials the fine aggregate shall not contain iron pyrites, iron oxides, mica, shale, coal or other laminar soft or porous materials or organic matter unless the Contractor can show by comparative tests on finished concrete as per the direction of the Engineer, that the presence of such materials does not affect the properties of the concrete.

(4) Coarse Aggregate

Coarse aggregate shall be clean hard and durable crushed rock, crushed gravel or natural gravel corresponding to the following classes:

Class A: Aggregate shall consist of crushed igneous or quartzite rock from an approved source.

Class B: Aggregate shall consist of crushed quarry rock other than Class A from an approved source.

Class C: Aggregate shall consist of natural or partly crushed gravel, pebbles obtained from an approved gravel deposit. It may contain a quantity of material obtained from crushing the oversize stone in the deposit provided such material is uniformly mixed with the natural uncrushed particles.

Class D: Aggregate shall consist entirely of crushed gravel. The crushed gravel shall be produced from material retained on a standard sieve having an opening at least twice as large as the maximum size of aggregate particle specified.

Class E: Aggregate shall consist of an artificial mixture of any of the above classes of aggregate the. The use of Class E aggregate and the relative proportions of the constituent materials shall be approved by the Engineer.

Coarse aggregate shall be supplied in the nominal size called for in the contract and shall be of the grading as single sized aggregate or graded aggregate of nominal size 40 mm, 20 mm, 12.5 mm and 10 mm in accordance with IS 383.

Other properties shall be as set out below:

Flakiness Index: When tested in accordance with IS 2386 Part 1, the Flakiness Index of the coarse aggregate shall be as set out hereunder:

For ordinary concrete : not more than
25 For high quality concrete : not more than 15

If the Flakiness Index of the coarse aggregate varies by more than five units from the average value of the aggregate used in the approved trial mix, then a new set of trial mixes shall be carried out if the workability of the mixes has been adversely affected by such variation.

Water Absorption: The aggregate shall not have water absorption of more than 2 per cent when tested as set out in IS 2386 Part 3.

Los Angeles Abrasion (LAA): The aggregate shall have LAA not more than 45% for ordinary concrete, and not more than 35% for high quality concrete, when tested in accordance with IS 2386 Part 4.

Aggregate Crushing Value (ACV): The aggregate shall have ACV not more than 30% for pavement structure and not more than 45% for other structure when tested in accordance with IS 2386 Part 4.

Alkali Aggregate Reactivity: The aggregate shall comply with IS 383/3.2 notes when tested in accordance with IS 2386 Part 7.

(5) Testing Aggregates

(a) Acceptance Testing

The Contractor shall deliver to the Engineer samples containing not less than 50 kg of any aggregate which he proposed to use in the works and shall supply such further samples as the Engineer may require. Each sample shall be clearly labelled to show its origin and shall be accompanied by all information called for in IS 2386 Part 1 to 8. Tests to determine compliance of the aggregates shall be carried out by the Contractor in a laboratory acceptable to the Engineer, if the tested materials fail to comply with the Specification, further tests shall be made in the presence of the Contractor and the Engineer. Acceptance of the material shall be based on the results of such tests.

All the materials shall be accepted if the results of not less than three consecutive sets of test executed in accordance with IS 2386 (Part 1-8) show compliance.

b) Compliance Testing/Process Control Testing

The Contractor shall carry out routine testing of aggregates for compliance with the Specification during the period that concrete is being produced for the works. The tests set out below shall be performed on aggregates from each separate source on the basis of one set of tests for each day on which aggregates are delivered to site provided that the set of tests shall represent not more than 100 tons of fine aggregate and not more than 250 tons of coarse aggregate, and provided also that the aggregates are of uniform quality.

Grading: IS 2386 Part 1

Silt, Clay Contents and Organic Impurities: IS 2386 Part 2

If the aggregate from any source is variable, the frequency of testing shall be increased as instructed by the Engineer.

In addition to the above routine tests, the Contractor shall carry out the following tests at the stated frequencies:

Chloride Content: As frequently as may be required to ensure that the proportion of chlorides in the aggregates does not exceed the limit stated in the Specification. Sulphate Content and Alkali Aggregate Reactivity; As frequently as may be required according to the variability of sulphate content and alkali reactivity assessed from the laboratory tests carried out during the concrete mix design.

(6) Delivery and Storage of Aggregates

Aggregates shall be delivered to site in clean and suitable vehicles. Different type or sizes of aggregates shall not be delivered in one vehicle.

Each type or size of aggregate shall be stored in a separate bin or compartment having a base such that the contamination of aggregate is prevented. Dividing walls between bins shall be substantial and continuous so that no mixing of types or sizes occurs.

The storage of aggregates shall be arranged in such a way that drying out in hot weather is prevented in order to avoid sudden fluctuations in water content. Storage of fine aggregates shall be arranged in such way that they can drain sufficiently before use in order to prevent fluctuations in

water content of the concrete.

(7) Water for Concrete and Mortar

Water shall be clean and free from harmful matter and shall comply with the requirements of IS 456.

Brackish water containing more than 1000 ppm chloride ion or 2000 ppm sulphate ion shall not be used for mixing or curing concrete.

The Contractor shall carry out tests in compliance with IS 456 to establish compliance with Specifications.

(8) Admixtures

(a) General

The use of admixtures in concrete may be required under the contract to promote special properties in the finished concrete or may be proposed by the Contractor to assist him in compliance with the Specification.

In all cases the Contractor shall submit to the Engineer full details of the admixture he proposes to use and the manner in which he proposes to add it in the mix. The information provided shall include:

(i) The typical dosage, the method of dosing, and the detrimental effects of an excess or deficiency in the dosage.

(ii) The chemical names of the main active ingredients in the admixture.

(iii) Whether or not the admixture contains chlorides, and if so the chloride ion content expressed as a percentage by weight of admixture.

(iv) Whether the admixture leads to the entrainment of air when used at the manufacturer's recommended dosage, and if so the extent to which it does so.

(v) Details of previous uses of the admixture in Nepal.

The chloride ion content of any admixture shall not exceed 1 per cent by weight of the admixture nor 0.02 per cent by weight of the cement in the mix.

Admixtures shall not be mixed together without the consent of the Engineer.

Calcium chloride or admixtures containing calcium chloride shall not be used in pre- stressed concrete.

Admixtures may be supplied as liquid or as powder. They shall be stored in sealed and undamaged containers in a dry, cool place. Admixtures shall be dispensed in liquid form and dispensers shall be of sufficient capacity to measure at one time the full quantity required for each batch.

(b) Workability Agents

Workability agents shall comply with BS 5075 and shall not have any adverse effect on the properties of the concrete.

9.3. The Design Of Concrete Mixes

(1) Classes of Concrete

The classes of structural concrete to be used in the works shall be as shown on the Drawing and designated in following Table, in which the class designation includes two figures. The figures indicates the characteristic strength Fck at 28 days expressed in MPa (N/mm2) and the second figure is the maximal nominal size of aggregate in the mix expressed in millimetres. Letter M in the class designation stands for Mix, letters SM stand for Special Mix.

Consistence of the mix, assessed through the Slump Test where the slump is measured in millimetres, is designated as follows:

S: Stiff consistence, for slump < 40

P: Plastic consistence, for slump > 40 and < 90

VP: Very Plastic consistence, for slump >90 and < 150 F: Flowing consistence for slump > 150

9.3.1.1. Concrete Classes and Strength

Classes of concrete	Consistence	Type of uses	Characteristic Strength (fck) MPa (N/mm2)	Maximum Nominal Size of Aggregate (mm)	Trial mixes Minimal Target Strength fd=1.1fck MPa (N/mm2)	Early works test cubes	
						Any one result (aver, of 3 cubes) MPa (N/mm2)	Average of 3 consecutive results MPa (N/mm2)
M 10/75	S	Ordinary	10	75	11	10	14
M 10/40	S	Ordinary	10	40	11	10	14
M 15/20	S	Ordinary	15	20	16.5	15	19
M 15/40	S	Ordinary	15	40	16.5	15	19
M 20/20	S	Ordinary	20	20	22	20	24
M 20/40	S	Ordinary	20	40	22	20	24
M 25/20	S	Ordinary	25	20	27.5	25	29
M 25/40	S	Ordinary	25	40	27.5	25	29

(2) Design of Proposed Mixes

Concrete mixes shall comply with relevant Clause.

The Contractor shall design all the concrete mixes called for in the Drawing using the ingredients which have been approved by the Engineer in compliance with the following requirements:

(a) The aggregate portion shall be well graded from the nominal maximum size of stone down to the 150 micron size.

(b) The cement content shall be such to achieve the strength called for but in any case not less than the minimum necessary as shown in following Tables

(c) The workability shall be consistent with ease of placing and proper compaction having regard to the presence of reinforcement and other obstructions.

(d) The water/cement ratio shall be the minimum consistent with adequate workability but in any case not greater than 0.5 for classes of concrete from M20 to M50 taking due account of any water contained in the aggregates. The Contractor shall take into account that this requirement may in certain

cases require the inclusion of a workability agent in the mix.

9.3.2.1. Minimum Cement Content

Classes of concrete	Minimum cement content in kg per m concrete of compacted		
	Moderate exposure	Intermediate exposure	Severe exposure
M15/40, M15/20	150	200	225
M20/40, M20/20	250	300	325
M25/20, M25/40	300	325	350

Note: The minimum cement contents shown in the above table are required in order to achieve impermeability and durability. In order to meet the strength requirements in the Specification higher contents may be required.

The categories applicable to the works are based on the factors listed hereunder: Moderate exposure : Surface sheltered from severe rain, buried concrete.
Intermediate exposure : Surface exposed to severe rain; alternate wetting and drying;

traffic; corrosive fumes; heavy condensation.

Severe exposure : Surface exposed to water having a pH of 4.5 or less, groundwater containing sulphate.

(3) Laboratory Trial Mixes

For each mix of concrete for which the Contractor has proposed a design, he shall prepare the number of concrete batches specified hereunder:

Nominal composition : 3 separate batches

Modified compositions, the quantities of other constituents being unchanged:

Water	:	+10%	1 batch
Water	:	-10%	1 batch
Cement	:	+15%	1 batch
Cement	:	-15%	1 batch

Samples shall be taken from each batch and the following action taken, all in accordance with BS 1881:

(a) The slump of the concrete shall be determined.

(b) Six tests cubes shall be cast from each batch. In the case of concrete having a maximum aggregate size of 20 mm, 150 mm cubes shall be used. In the case of concrete containing lager aggregate, 200 mm cubes shall be used and in addition any pieces of aggregate retained on a 50 mm IS sieve shall be removed from the mixed concrete before casting the cubes.

(c) The density of all the cubes shall be determined before the strength tests are carried out.

(d) All faces shall be perpendicular to each other.

(e) Three cubes from each batch shall be tested for compressive strength at seven days and the remaining three at 28 days.

For "Smaller Contracts works", the following compositions are suggested as a starting basis for the Laboratory trials for one m3 of concrete:

Concrete Class	Characteristic Strength N/mm	Cement (kg)	Total aggregates (kg)	Fine aggr./ Total Aggr. (%)	Water (max) (lit.)	Workability
M 15/40-1 M 15/20 M 20/20	15 20	250 300	1900 1875	35-45 35-45	160 165-170	Stiff-Plastic Stiff

A "result" being the average strength of the three cubes from one batch, the average of the three results from tests at 28 days for the nominal composition shall not be less than the Minimal Target Strength shown in the Table.

One result from the modified compositions shall not be less than the nominal strength as shown on Table above.

(4) Site Trials

At least six weeks before commencing placement of concrete in the permanent works, site trials shall be prepared for each class of concrete specified.
For each mix of concrete for which the Contractor has proposed a design and successfully tested in Laboratory , he shall prepare three separate batches specified hereunder using the materials which have been approved for use in the works and the mixing plant which he proposes to use for the works. The volume of each batch shall be the capacity of the concrete mixer proposed for full production.

Samples shall be taken from each batch and the action taken. The average of the three results of tests at 28 days shall not be less than the Minimal Target Strength.

The Contractor shall also carry out tests to determine the drying shrinkage of the concrete unless otherwise directed by the Engineer.

Based on the results of the tests on the Laboratory trial and site trial mixes, the Contractor shall submit full details of his proposals for mix design to the Engineer, including the type and source of each ingredient, and the results of the tests on the trial mixes.

If the Engineer does not agree to a proposed concrete mix for any reason, the Contractor shall amend his proposals and carry out further trial mixes. No mix shall be used in the works without the written consent of the Engineer.

(5) Quality Control of Concrete Production

(a) Sampling

For each class of concrete in production at each plant for use in the works, samples of concrete shall be taken at the point of mixing or of deposition as instructed by the Engineer, all in accordance with the sampling procedures described in BS 1881 and with the further requirements set out below.

Six 150 mm or 200 mm cubes as appropriate shall be made from each sample and shall be cured and tested in accordance with BS 1881 three at seven days and the other three at 28 days. Where information samples are required, such as for post-tensioning operations, three additional cubes shall be made.

The minimum frequency of sampling of concrete of each grade shall be as following: For
1-5 m3 quantity of work - 1 no. of sample

For 5-20 m3 quantity of work - 2 no. of sample

For 20 m3 and more quantity of work - 3 no. of sample plus one additional for

each 20m3 or part thereof.

At least one sample shall be taken from each shifts of work.

Until compliance with the Specification has been established the frequency of sampling shall be three times that stated above and not less than 3 samples/day for each class of concrete in production at each plant or such lower frequency as may be instructed by the Engineer.

(b) Testing

(i) The slump of the concrete shall be determined for each batch from which samples are taken and in addition for other batches at the point of production and deposition or at the frequency instructed by the Engineer. The slump of concrete in any batch shall not differ from the value established by the trial mixes by more than 25 mm or one third of the value whichever is the less.

(ii) The air content of air entrained concrete in any batch shall be within 1.5 times of the required value and the average value of four consecutive measurements shall be within the required value expressed as a percentage of the volume of freshly mixed concrete.

(iii) Early Works: Until such time as sufficient test results are available to apply the method of control described in (iv) below, the compressive strength of the concrete at 28 days shall be such that no single result (average of 3 cubes) is less than the characteristic strength fck as shown in Table under the Heading "early works test cubes" and also that the average of three consecutive results is not less than fck +4 as shown in Table under the same heading. The 7-day cube result may be used as an early strength indicator, at the discretion of the Engineer.

(iv) When at least 20 consecutive results on tested batches are available for any class of concrete mixed in any one plant, no single result shall be less than fck +4 (N/mm2) and also the average of any group of three consecutive results shall not be less than fck+4 (N/mm2).

In addition the Coefficient of Variation shall be less than the figure given below:

Number of batches	Maximum coefficient of variation	
	Ordinary concrete	High quality concrete
After 20 tested batches After 50 tested batches	18% 15%	15% 12%

Where the Coefficient of Variation = (Standard Deviation of the results/Average value of the result)

Failure to comply with Requirements:

If any one result in a group of three consecutive results is less than fck-4 (N/mm_), but the other results of group satisfy the strength requirement, then only the batch from which the failed result was obtained shall be deemed not to comply with the Specification.

If the average strength of the group is less than the strength requirement then all the batches between those represented by the first and the last result shall be deemed not to comply with the Specification, and the Contractor shall immediately adjust the production procedure or the mix design subject to the agreement of the Engineer to restore compliance with the Specification.

The Contractor shall take necessary action to remedy concrete which does not comply with this Specification. Such action may include but not necessarily confined to the following :

- Increasing the frequency of sampling until control is again established.

- Carrying out non destructive testing such as ultrasonic measurements, load tests or other appropriate methods,
- Cutting test cores from the concrete and testing in accordance with BS 1881
- Carrying out strengthening or other remedial work to the concrete where possible or appropriate.
- Removing the concrete.
- Accepting as sub standard

10. WOOD WORK

10.1. Quality:

Generally the timber shall be Sal wood unless otherwise stated of the best quality obtained from an approved saw mill. Timber for carpentry shall be straight and free from twist, sapwood, shakes, dead and loose knots, worm holes, other holes, signs of decay and other defects, and seasoned and shall comply with the requirements of IS 883-1994 All the timber shall be seasoned and free from decay, harmful fungi and insect attacks and from any other damage of harmful nature which will affect the strength, durability, appearance or its usefulness for the purpose for which it is required. The minimum compressive strength of the timber shall be 70 kg/cm2.

10.2. Kind:

The timber shall be best quality timber as specified in the item. The samples of the approved timber to be used shall be deposited in the office of Engineer for the purpose of comparison.

Colour:

The Colour shall be uniform as far as possible, the darkness of colour amongst colour species of timber being generally a sign of strength and durability.

Moisture:

The natural moisture content of any untreated timber delivered to site shall not exceed those as recommended by IS 287-1993. All timber shall be seasoned to moisture content of not more than 22% for frames and 15% for shutter. The contractor's price must include for any kiln drying that may be necessary to achieve these figures

Stacking:

As soon as the foundation of building are laid all necessary timber, scantling shall be brought to the site and stacked as laid down in IS 401 - 1967 till required. All timber of assembled woodwork shall be protected from the weather and stored in such a way as to prevent attack by termites, insects or decay fungi for which temporary shed shall be built. All timber shall be stored at least 750mm above ground level or more, if deemed necessary and individual members shall be separated by strips so that air may circulate around all four sides.

Timber for the work shall not be brought to the site of work until the sample and approved by the Engineer who may reject the defective timber/timber works. Any effort like plugging,

painting, using any adhesive or resinous material to hide defect shall render the pieces, rejectable by the Engineer. Timber presented for inspection shall clean and free from dust, mud, paint or other material, which may conceal the defects. Cut-off ends for protection can be done after inspection with raw linseed oil or any other materials approved by the Engineer. No timber be painted, tarred or oiled primed without the previous permission of the Engineer.

10.3. Sawing:

All beams and scantling shall be sawed straight lines, planes and of uniform thickness with full measurement from end to end and shall be swan along grain and under no condition beams, rafters, wall plates, blocks etc. shall be sawed across grain. They shall be sawn with such sufficient margin as to secure specified dimensions, lines and planes after being brought and dressed.

All wood work except door/window frames or ceiling shall be painted with two coats of creosote confirming to IS 218 1952. Any timber rejected shall at once be removed from the site. The contractor shall be responsible up to the end of the maintenance period for executing at his own cost all work necessary to eradicate insect attack of timber which becomes evident, including the replacement of timber attached or suspected of being attacked, not with standing that the timber concerned may have already been inspected and passed as fit to use before.

10.4. Hardware

Hardware shall consist of bolts, with the necessary nuts and washers, timber connectors, drift pins, dowels, nails, screw nails, coach bolts, spikes and other metal fasteners. They shall be galvanized or un-galvanized as specified. Bolts, nuts and washers shall be mild steel and comply with IS 1363-1992. Drift Pins and dowels shall be mild steel. Nails shall comply with IS 723-1972. Screw nails and screws shall comply with IS 451-1972/IS 2585-1968. Coach bolts shall comply with IS 2609-1972. Spikes and other metal fastenings shall be of mild steel.

10.5. Holdfast

All panels except where specified in the drawing shall be fitted with frames having steel double breasted butt hinges. Window frames shall have three 7.5cm / 2.00 mm thick hinges on each panel whereas the size of hinges for door panels shall be as follows:

Width of panels (up to 75cm) : 10cm double breasted butt hinge, 2.00mm thick, 3 nos. Width of panels exceeding 75cm : 12.5cm double breasts butt hinges, 2.25mm thick, 3 nos.

Following shall be the size of the screw:

For 7.5cm hinges : 25mm long No.
8 For 10cm hinges : 30mm long No.
9 For 12.5cm hinges : 45mm long No.
10

Above No. refers to Nettlefolds or equivalent screws only.

Doors shall be fitted with double-action automatic hydraulic door closers wherever instructed.

10.6. Tower Bolt

All tower bolts shall be of aluminium with bolt casted monolithic with the handle. Following shall be size of the tower bolt.

Windows Panels 15cm top and bottom Door
15cm top

15cm bottom (wherever necessary)

All screws shall be of Nettlefold or equivalent suitable lengths and diameter.

10.7. Handles

All doors shall be provided with handle on both sides and all windows with handles on the inner side only. Door handled shall be minimum 15cm clear inside and window handle 10cm clear.

All doors shall be fitted with mortise lock of heavy quality, preferably of aluminium.

Note

A sample of hardware (tower bolts, handles, hinges, catch and allotrope and screws) will be displayed at the site at Project Engineer's office as the sample of desired quality and design. The Contractor shall submit samples of hardware in writing to Project Engineer for approval.

10.8. Construction

When ventilator is provided above the door, full length, of the vertical post shall be provided. Joints in the frame vertical style or horizontal rail shall not be allowed .The unrelated edges of the frame in the opening shall be rounded or beaded uniformly.

The rebate and the plaster key grooves shall be provided as shown in the drawing. Vertical part of the frame shall be embedded at least 30 mm in the masonry or concrete or flooring. Hold fasts shall be provide as specified and any adjustment of spacing necessary shall be erected in position and held in plumb with proper supports from both sides and built in masonry as it is being built.

The Work shall be as per the drawing .the timber shall be properly planned wrought and dressed in a workmanship manner.

All joinery work shall be securely mortised and tenoned and glued with best quality waterproof glue. All sections and dimensions are to be as shown on drawings. For all joinery work, use of nails shall not be permitted. Wood screws of appropriate size and of approved make shall be used. Wherever practicable, means of fastening the various parts together shall be concealed. All work

(both carpentry and joinery) shall be to the dimensions shown on the drawings.

The rate of woodwork shall include the cost of all sawing, planning, joining, bolts, nails, spikes, keys wedges, pins, screw etc. necessary for the framing and fixing. Joints and portions inserted in masonry or floor shall be allowed for in the measurement. Plugging in of holes for hold fasts shall be done in neat manner. Any defects observed after installation shall be rejected. Sample of workmanship shall be submitted for approval.

10.9. Timber Preservation

When described in the contract or shown on the Drawing timber shall be treated with preservative in accordance with the Indian Standard Code of Practice for the preservation of timber IS 401-1982.

10.10. Insect Damage

All timber shall be free from live barer beetle or other insect attack when brought upon the Site. The Contractor shall be responsible to the end of the maintenance period for executing at his own cost all Work necessary to eradicate insect attack of timber which becomes evident, including the replacement of timber attached or suspected of being attacked, not with standing that the timber concerned may have already been inspected and passed as fit for use.

10.11. Seasoning of Timber

All timber shall be seasoned to a moisture content of not more than 22% for carpentry and 15% for joinery. The Contractor's price must include for any kiln drying that may be necessary to achieve these figures.

10.12. Inspection and Testing

The Project Engineer shall be given facilities for inspection of all works in progress whether in Workshop or on Site. All timber as it arrives on the Site and not approved by them must be removed forthwith, failing which the Employer, with the advise of the Project Engineer, may arrange for the removal of the rejects and impose of them as they may consider advisable at the Contractor's expenses.

Notwithstanding approval having been given as above, any timber incorporated in the Works found to be in any way defective before the expiry of the maintenance period shall be removed and renewed at the Contractor's expense. The Contractor is to allow for testing or prototypes of special construction units and the Project Engineer shall be at liberty to select any samples they may require for the purpose of testing i.e. for moisture content, or identification of species, strength, etc.

Where timbers need to be extended into a wall, they shall be thoroughly "Brush Treated" with a wood preservative approved by the Project Engineer, and as much clear air space maintained around the timber where it adjoins the wall as possible.

10.13. Clearing Up

The Contractor is to clear out and destroy or remove all cut and shavings and other wood waste

from all parts of the building and the Site generally, as the work progress and at the conclusion of the work.

10.14. Galvanizing

When described in the contract or shown on the Drawing, all hardware shall be galvanized in accordance with the Indian Standard Recommended Practice for Hot-Dip Galvanizing of Iron

10.15. Carpentry and Joinery

10.15.1. Carpentry

All carpentry shall be executed with workmanship of the best quality. Scantlings and boarding shall be accurately sawn and shall be of uniform width and thickness throughout. All carpenter's work shall be left with sawn surface except where particularly specified to be wrought.

All carpenter's work shall be accurately set out in strict accordance with the drawings and shall be framed together and securely fixed in best possible manner with properly made joints. All necessary brads, nails and screws, etc. shall be provided as directed and approved.

Actual dimensions of scantlings for carpentry shall not vary from the specified dimensions by more than 3mm in deficiency or excess but must be uniform throughout. Boards 25mm thick or less shall hold up to the specified sizes. All timbers shall be as long as possible and practicable, in order to eliminate joints.

10.15.2. Joinery

Generally all joiner's work shall be accurately set out on boards to full size for the information and guidance of the artisans before commencing the respective works, with all joints, iron work and

other works connected therewith fully delineated. Such setting out must be submitted to the Project Engineer and approved before such respective works are commenced.

All jointer's work shall be cut out and framed together as soon after the commencement of the building as is practicable, but is not to be wedged up or glued until the building is ready for fixing same. Any portions that warp wind or develop shakes or other defects within twelve months after completion of the works shall be removed and new fixed in their place on Contractor's own expense.

All work shall be properly mortised, tennoned, housed, shouldered, dovetailed, notched, wedged, pinned, braided, etc., as directed and to the satisfaction of the Project Engineer and all properly glued up with the best quality approved glue.

Joints in joinery must be as specified or detailed, and so designed and secured as to resist or compensate for any stresses to which they may be subjected. All nails, springs, etc. are to be punched and puttied. Loose joints are to be made where provision must be made for shrinkage, glued joints where shrinkage need not be considered and where sealed joints are required. Glue for load-bearing joints or where there is damp conditions must be of the resin type. For non-load-bearing joints or where dry conditions may be guaranteed casein or organic glues may be used.

Where Joinery work is specified to be built in, it shall be the responsibility of the contractor to ensure that the joinery works are set to plumb and true and shall not be damaged or displaced by

subsequent operations. The contractor shall also provide and secure suitable anchors or other fixings as per drawings and details.

All exposed surfaces of joinery Work shall be wrought and all arises "eased-off" by planning and sand papering to an approved finish suitable to the specified treatment.

Dimensions

Joinery shall hold up to the specified sizes and as measured.

10.15.3. Fixing Joinery

All beads, fillets and small members shall be fixed with round or oval brads on nails on nails well punched in and stopped. All large members shall be fixed with screws; the heads let in and palliated to match the grain. Unless otherwise specified, plugs of external work shall be of hardwood, plugs for internal work may be of softwood. Holes for plugging must be made with a proper drilling tool and the holes completely filled with the plugging material.

Unless otherwise specified all skirting, window, grounds and backings for same, fillets etc. shall be plugged at intervals not exceeding 60cm.

10.15.4. Budding Joiner

All door and window frames, sills, wooden bars etc., which are fixed to brickwork, concrete by means of grounds, lugs, etc., shall be bedded solid in mortar as previously described and pointed with a recessed joint 6mm deep to the approval of the Project Engineer.

Plywood's, Blackboards, Chipboards etc., shall be of a standard quality. They shall be bonded with synthetic resin or "interior" type unless otherwise stated. Where stated to be "exterior" type, they shall be weatherproof. All exposed edges of blackboard and clipboard shall be lipped with hardwood as described below.

Samples of all such materials and their source of manufacture must be approved by the Project Engineer before used in the works.

10.16. Plastic Sheeting

Shall be approved laminated sheeting 1.5mm thick, securely fixed by means of Aerodux 185 adhesive, and in colours approved by the Project Engineer.

10.17. Ironmongery

All locks and Ironmongery shall be fixed with screws, etc., to match. Before the woodwork is painted, handles shall be removed, carefully stored and re-fixed after completion of painting and locks oiled and left in perfect working order.

Prices for fixing locks must include for organizing master-keying systems if required and all keys shall be labeled with door references marked on approved labels before handling the Project Engineer on completion.

10.18. Protection of Work

The contractor shall be responsible for the temporary doors and closing in openings necessary for the protection of the work during progress. He shall also provide and maintain any other temporary covering required for the protection of finished woodwork that may be damaged during the progress

of the work if left unprotected.

11. DETAILED SPECIFICATIONS OF BUILDING WORKS (CIVIL)

item	Particulars	Detailed Specification
11. A. Site Preparation Works		
	General	All material from site clearance shall be the property of the Employer and depending on its nature shall, as directed by the Engineer, be either a. Stockpiled for future reuse. b. disposed by controlled burning. c disposed by tipping or side casting with all lift within 30m. Topsoil, referred to in this Clause shall mean the top 100 mm layer of soil with roots and organic matter, which is capable of vegetation support. **Measurement** Clearing and grubbing executed as per this Specification shall be measured in square meter. Cutting trees including removal of stumps and their roots and backfilling to required compaction shall be measured in number. For this purpose girth shall be measured at a height 1 meter above ground. Cutting of trees up to 300 mm girth including removal of stumps and roots and backfilling of holes with compaction shall not be measured separately. **Payment** Clearing and grubbing and cutting trees shall be paid at their respective contract unit rates which shall be the full and the final compensation to the Contractor. The contract unit rate for cutting of trees of girth above 300 mm shall also include handling, salvaging, piling and disposing off the cleared materials with all leads and lifts.
A1	**Tree cutting**	The Contractor shall take the necessary precautions to prevent damage to structures and other private or public property. If necessary, trees shall be cut in sections from the top downwards. The branches of trees to be left standing shall be trimmed so as not to intrude into a space of 7 m above the roadway. Such individual trees as the Engineer may designate and mark in white paint shall be left standing and uninjured. In order to minimize damage to trees that are to be left standing, trees shall be felled towards the centre of the area being cleared, if so required by the Engineer. Permission for cutting trees must be obtained from the competent authority that may require that trees be numbered, measured and marked in the presence of officials from that authority. Cutting of such trees shall then be carried out by the Contractor and the timber stored at designated locations within the Right of Way. Felling and cutting of trees on the site and pilling them off the site shall conform to the requirements of the competent authority. All tree trunks and branches in excess of 150 mm in diameter shall be cleaned off, secondary branches cut into suitable length and

		stacked at sites indicated by the Engineer. Such timber shall not be used by the Contractor for any purpose and shall remain the property of the Employer. All timber except such timber as can be used and all brush, stumps, roots, rotten wood and other refuse from the clearing and grubbing operations shall be completely removed from within the Right of Way. Where directed by the Engineer, the area covered by anthills shall be treated, after excavation and before backfilling of cavities, with an approved ant control chemical.
A2	**Removal of roots**	In the site all trees up to 300 mm girth, stumps and roots shall be removed to a depth of not less than 900 mm below the finished level and a minimum of 500 mm below the original ground level whichever is lower. Except in borrow areas the cavities resulting from the grubbing shall be backfilled with approved material and compacted to a density not less than the density of the surrounding ground.
A3	**Site cleaning**	Clearing shall consist of the cutting, removing and disposal of all trees, bushes, shrubs, grass, weeds, other vegetation, anthills, rubbish, fences, top organic soil not exceeding 150 mm in thickness and all other objectionable material, resulting from the clearing and grubbing. It shall also include the removal and disposal of structures that obtrude, encroach upon or otherwise obstruct the work. The moving of a certain amount of soil or gravel material may be inherent to or unavoidable during the process of clearing and no extra payment shall be made for this. Clearing shall include the removal of all rocks and boulders of up to 0.15 m^3 in size exposed or lying on the surface.
A4	**Surface dressing**	**Conservation of Top Soil** Where suitable topsoil exists within the limits of the area to be cleared and grubbed, the Contractor shall, if ordered by the Engineer, remove the topsoil together with any grass and other suitable vegetation. If not used immediately, the topsoil shall be transported and deposited in stockpiles for later use. **Conservation of Flora** Where provided for in the contract, certain designated flora encountered in the road reserve and borrow areas shall be carefully protected by the Contractor. In his tendered rate for Site Clearance, he shall include for the careful removal and planting of the flora in a protected and fenced-off area and, on completion of the road, for the replanting of the flora in suitable positions in the road reserve in accordance with the Engineer's instructions. **Execution of Work** Stumps, embedded logs, roots and all other vegetation growth and accumulated rubbish of whatsoever nature and all other objectionable material shall be completely removed to a specified depth. Normally the portions of the road reserve that fall within the limits of the road prism, as well as certain borrow areas shall be cleared and/or grubbed. Where the road reserve is to remain unfenced, the full width of the road reserve shall be cleared and/or grubbed except

		for such trees designated by the Engineer to be left standing and uninjured. The Contractor shall mark the boundaries of the area for clearing and grubbing and seek the approval of the Engineer before commencement of the work. The Engineer shall designate in detail the exact areas to be cleared and grubbed and the time at which it shall be done. **Disposal of Material** Material obtained from clearing and grubbing shall be disposed off in borrow pits or other suitable places and be covered up with soil or gravel as directed by the Engineer. The burning of combustible material shall not, normally, be permitted and may only be done with the prior written approval of the Engineer. Where fences have to be taken down, fencing wire shall be neatly wound into reels and all such wire, together with all fence posts and other serviceable material from structures, etc., shall be stacked at sites indicated by the Engineer. **Re-clearing of Vegetation** When portions of the road reserve, borrow or other areas have been cleared in accordance with the Specifications, but in the course of time, vegetation grows again during construction, the Engineer may, if he considers it necessary, order that the area be re-cleared. Before the bottom layer of the embankment is made, the Contractor shall grub up and remove any vegetation that may in the meantime have grown on the surfaces previously cleared and grubbed. Such re-clearing of areas previously cleared includes the removal and disposal of grass, shrubs and other vegetation in the same manner as for the first clearing operation. No separate payment shall be made for re-clearing of vegetation.
A5	**Turfing**	The area from where the grass roots are to be obtained shall be specified by the Engineer-in-Charge at the time of execution of the work and no royalty shall be charged on this account from the contractor. The soil shall be suitably moistened and then the operation of planting grass shall be commenced. The grass shall be dibbled at 10 cm, 7.5 cm, 5 cm apart in any direction or other spacing as described in the item. Dead grass and weeded shall not be planted. The contractor shall be responsible for watering and maintenance of levels and the lawn for 30 days or till the grass forms a thick lawn free from weeded and fit for moving whichever is later. Generally planting in other direction at 15 cm, 10 cm, spacing is done in the case of large open spaces, at 7.5 cm spacing in residential lawn and at 5cm spacing for Tennis Court and sports ground lawn. During the maintenance period, any irregularities arising in ground levels due to watering or due to trampling by labour, or due to cattle straying thereon, shall be constantly made up to the proper levels with earth as available or brought from outside as necessary, Constant watch shall be maintained to ensure that dead patches are replanted and weeds are removed.

		Measurements Length, breadth of the lawn grassed shall be measured and the area shall be calculated in sqm. correct to two places of decimal. **Rate** The rate shall include of all the labour and material involved in all the operations described above.
A6	**Tree planting inclusive tree guards**	In ordinary soil, including refilling earth after mixing with oil cake, manure and watering. Holes of circular shape in ordinary soil shall be excavated to the dimensions described in the items and excavate soil broken to clods of size not exceeding 75 mm in any direction, shall be stacked outside the hole, stones, brick bats, unsuitable earth and other rubbish, all roots and other undesirable growth met with during excavation shall be separated out and unserviceable material removed from the size as directed. Useful material, if any, shall be stacked properly and separately. Good earth in quantities as required to replace such discarded stuff shall be brought and stacked at site by the contractor. The tree holes shall be manured with powdered Neam/castor oil cake at the specified rate along with farm yard manure over sludge shall be uniformly mixed with the excavated soil after the manure has been broken down to powder, (size of particle not be exceeded 6 mm in any direction) in the specified proportion, the mixture shall be filled in to the hole up to the level of adjoining ground and then profusely watered and enable the soil to subside the refilled soil shall then be dressed evenly with its surface about 50 to 75 mm below the adjoining ground level or as directed by the Engineer-in-charge. **Tree Guard** The tree guard shall be 450 mm in diameter and 1 meter high above ground level and 25 cm in below ground level. The tree guard shall be framed of 4 nos. 20 x 3 mm MS. Flat welded to 50x50 wire mesh. The entire tree guard shall be given two coats of synthetic enamel paint of approved brand and manufacturer of required shade brand and manufacturer of required shade over a priming coat of ready mixed steel primer of approved brand and manufacturer. ***Measurement :*** The tree guard shall be enumerated. ***Rate:*** The rate shall include the cost of all the labour and material involved in all the operations described above.
A7	**Soil Investigation**	The job includes the activities like soil investigation works, bore hole of required depth including mobilization and demobilization of drilling machines (Rotary or percussion), Field test (SPT, Field density test,vane shear test), lab test (consolidation, direct shear test, unconfined compression test, chemical test ,specific gravity test, seive analysis, moisture content, atterbergs limits tests etc.) and preparation of soil analysis report
11. B. Soil and Sand Works		
B1, B7	**Excavation**	Foundation trench shall be dug to the exact width and depth and levels as indicated in the drawings or to such lesser or greater extent as the Engineer may advice. Sides of trenches shall be

		vertical. In case the soil does not permit vertical sides, the Contractor shall protect side with timber shoring. Excavated earth shall not be placed within 1.5 meter of the edge of the trench. The Project Engineer may direct the Contractor to place excavated earth at a particular site up to 30 meter away from the building. The bottom of the trench shall be perfectly levelled both longitudinally and transversely. The bed shall be lightly watered and well-rammed. Excess digging if done through mistake shall be filled with 1:4:8 concrete. Water, if any accumulated in the trench, shall be bailed out and all necessary precaution taken to prevent surface water from entering the trench. Soft and defective spot in the trench shall be dug out and removed and filled with concrete or materials prescribed by the Project Engineer. If rocks or boulders are found during excavation, they should be removed and the bed trench shall be levelled and made hard by consolidating the earth, at no extra cost. Above mentioned items or any variation thereof from the Bills of Quantities shall be measured and valued by the Engineer as a variation. After the completion of foundation masonry, the remaining portion of the trench not filled by masonry shall be filled up with earth in layers of 15cm, watered and well-rammed. Such filling shall be free from rubbish, refuse matters and clods, surplus earth, if any shall be removed and site shall be levelled and dressed. Trenches shall be measured as per drawings and rate shall be for complete Work including trench filling, for 30 meter lead and 1.5 meter lift including all tools and plants required for the completion of the work, removal of boulders, side shoring, pumping, and filling in voids by mass concrete (1:4:8). No excavation or foundation work shall be filled in or covered up before the inspection and approval of the Project Engineer. The starting level for excavation shall be deemed to be ground level or such level as may be specified by the Project Engineer, before the commencement of the Work. **Measurement** Measurement of all works will be made in m^3. Measurement for payment under the contract will be limited to the lines, grades, slopes and dimensions shown on the Drawings or as determined by the Engineer as the work proceeds on the basis of his evaluation of the soil/rock characteristics and site-conditions set forth in the Clause. All required and accepted excavation shall be measured from its original position. The volume shall be determined in cubic meters by average area method to be computed from the original and final cross-sections of the completed works as per the drawings or as directed by the Engineer. Where it is not practicable to use the above method of measurement, the Engineer may use volumetric method or any other method that in his opinion is best suited for accurate assessment. Any over-excavation shall be reinstated at the risk and cost of the Contractor as directed by the Engineer. **Payment**

		Payment for work under these clauses will be made on the basis of contract unit price indicated in the BOQ. The payment will be full and final compensation for all material, labour, and equipment to complete the works as specified.
B2,B3 B5,B6	**Backfill**	This work is related to all types of structures that require filling with specified material in the remaining volume or space of excavation left unoccupied by any permanent construction. Activities involved are collection and transportation of suitable material from local borrow pits or hill side excavation, placing the specified backfill material in layers, removal of foreign material if any, watering, compacting to required density, lines and levels as indicated in the drawings or as directed by the Engineer. Compaction shall proceed after the Contractor together with the Engineer identify the optimum thickness of each layer of suitable material, its optimum moisture content, and the corresponding number of passes required for a roller to arrive at the corresponding OMC. Prior to the start of works, the contractor shall prepare a trial stretch to establish the above parameters and shall repeat it as often as necessary due to change in layer thickness, borrow pits, and /or change in equipment. The Contractor may use the Standard Specifications for Roads and Bridge Works of GON, MWOT, DOR as guide for the above purpose. Backfill, classified according to their nature, are presented in the following Sub-Clauses. **Backfill in Plinth of Building and Parking** This work shall consist of filling for construction of embankment for plinth of building, road works and parking area and includes furnishing, placing, watering, compacting and shaping suitable material obtained from approved sources in accordance to lines, levels, grades, dimensions shown on the Drawings and or as required by the Engineer. Fill material used shall not exceed 150 mm and 75 mm within the 300 mm and 150 mm of formation level respectively. Fill material shall not have organic content value exceeding 5% and soaked CBR value less than 6% unless otherwise approved by the Engineer. Activities involved shall be preparation of surface, scarifying, supply, and laying of suitable material in layers. Except where material is laid close to the formation level, each layer shall not exceed 300 mm in thickness before compaction. Each layer of material shall then be watered and compacted to 95% dry density at optimum moisture content. Testing shall be carried out by sand cone using relevant BS or ASTM Standards. The top level of such fill executed shall be regarded as the formation level. **Common Backfill In Structures** Common backfill includes stacked suitable material recovered from excavations or material transported from outside. This may include granular material passing through 75 mm sieve or sandy soil. The backfill material shall be spread uniformly in layers, levelled, watered and then compacted to 95% of its optimum density in layers not exceeding 200 mm for buildings works and 250 mm for others. Compaction may be done manually or with mechanical

		means. Manual compaction in each layer will be done using 2 to 5 kg rammers made of cast-iron or wood. Mechanical compaction shall be executed with either plate compactors, earth rammers, depending on site conditions. Compaction tests shall be conducted with sand cones using relevant BS or ASTM standards. **Transportation And Handling Of Excess Disposable Material** This work will be required in connection with transportation of materials from demolition works (unless otherwise specified) and excess suitable or unsuitable material from excavation. Transport will include all distance beyond the initial lead (30m unless otherwise specified) for safe disposal as specified by the Engineer. Activities involved will be supply of necessary means of transport, loading, and transportation safely without damage/loss, unloading and levelling properly at disposal sites. The disposed materials shall be laid in layers mechanically or manually compacted to the satisfaction of the Engineer. The excess material shall be disposed manually with or without equipment like wheelbarrows or by trucks depending on the location of disposal sites. **Measurement** Measurement will be based first in m³ of loose volume of accepted works with 35% deduction for voids for all leads indicated in the BOQ. The measurement will be made at the disposal site. **Payment** Payment for work under this Clause will be made on the basis of contract unit price indicated in the BOQ. The payment will be full and final compensation for all material, labour, and equipment to complete the works as specified.
11. C. Masonry Works		
	General	**Mortar** Mortar shall comply with IS 2250-1981; Code of Practice for preparation and use of masonry mortar. The mortar used in work shall have the strength not less than 5 N/mm2 or 7.5 N/mm2 at 28 days as specified. However, if provided in the Contract, cement and sand may also be mixed in specified proportions. Cement shall be proportioned only by weight, by taking its unit weight as 1.44 ton per cubic meter and sand shall be proportioned by volume after making due allowance for bulking. **Mixing** The mixing shall be done in a mechanical mixer unless hand-mixing is permitted by the Engineer. If hand-mixing is allowed, the operation shall be carried out on a clear watertight platform. in the required proportion cement and sand shall be first mixed dry to obtain an uniform colour. Then required quantity of water shall be added and the mortar shall be mixed to produce workable consistency. The mortar shall be mixed for at least three minutes after addition of water in the case of mechanical mixing. In the case of hand mixing, the mortal shall be hoed back and forth for about 10

		minutes after addition of water in order to obtain uniform consistency. Only that quantity of mortar shall be mixed at a time which can be used completely before it becomes unworkable. Any mortar that has become unworkable due to loss of water before elapsing the initial setting time of cement shall be rewet to make it workable and shall be used in the works. On no account mortar shall be used after elapsing the initial setting time of cement. **Soaking Of Bricks** Bricks shall be soaked in water for a minimum period of one hour before use. When bricks are soaked they shall be removed from the tank sufficiently in advance so that at the time of laying they are skin dry. Such soaked bricks shall be stacked on a clean place where they are not spoilt by dirt, earth, etc. **Laying Brickwork** The brick shall be built in English bond with upwards facing frog in case of 230mm thick brickwork (for chimney made and fair faced machine made bricks both). The brick shall be built in running stretcher bond with upwards facing frog in case of half brick wall (for chimney made, traditional dachi appa brickwork and machine made both). Each brick shall be set with bed and vertical joints filled thoroughly with mortar. Selected bricks shall be used for the exposed brickwork as specified under 7.1.2. The walls shall be taken up truly plumb. All courses shall be laid truly horizontal and vertical joints shall be truly vertical. Vertical joints in alternate course shall come directly over the other. The thickness of brick courses shall be kept uniform and for this purpose wooden straight edge with graduation giving thickness of each brick course including joint shall be used. Necessary tools comprising of wooden straight edge, masons sprit level, square, foot rule, plumb, line and pins etc. shall be frequently and fully used by the masons to ensure that the walls are taken up true to plumb, line and levels. Both the faces of walls of thickness greater than 23cm shall be kept in proper plane. All the connected brickwork shall be carried up nearly at one level and no partition of work shall be raised more than one meter above the rest of the work. Any dislodged brick shall be removed and reset in fresh mortar. Before commencing any brickwork, the Contractor shall confer with other trades to ensure that all pipes, conduits, drains, sleeves, bolts, hangers, or any other materials necessary to be installed in the brickwork at the time it is built, have been fixed or provided for. **Joints** Bricks shall be laid that all joints are full of mortar. The thickness of joints shall be not more than 10mm. The face joints shall be raked to a minimum depth of 7mm by a raking tool during the progress of the work when the mortar is still green, so as to provide proper key for the plaster or pointing to be done. Where plastering pointing is not to be done, the joints shall be struck flush and finished at the time of laying. The face of brickwork shall be kept cleaned and mortar dropping removed. **Jointing With Existing Structures**

		When fresh masonry is to be placed against existing surface of structures, the surface shall be cleaned of all loose materials, roughened and wetted as directed by the Engineer so as to effect a good bond with the new work. **Openings** Openings in brickwork for air conditioning ducts, exhaust fans, grills pipes etc. shall be provided at the time of laying brickwork without any extra cost. After installation of piping, conduits, grills, etc. all openings left around pipes, conduits, grills etc. shall be checked and caulked with cement mortar to render the whole work vermin proof and tidily finished. The rates quoted are deemed to be inclusive of closing such pre determined openings including erection and dismantling of scaffolding if required, the placing of inserts, collars, grills etc. to be paid separately under respective items. **Curing** Green work shall be protected from rain by suitable covering. Masonry work in cement mortar shall be kept constantly moist on all faces for a minimum period of seven days. The top of the masonry work shall be left flooded with water so as not to disturb or washout the green mortar. During hot weather, all finished or partly completed work shall be covered or wetted in such a manner as to prevent rapid drying of the brick work. **Scaffolding** The scaffolding shall be sound and strong to withstand all loads likely to come upon it. The holes which provide resting space for horizontal members shall not be left in masonry under one meter in width or immediately near the skew backs of arches. The holes left in the masonry work for supporting the scaffolding shall be filled and made good. **Condition Of Equipment** All equipment used for mixing or transporting mortar and bricks shall be clean and free from set mortar, dirt or other injurious foreign substances. **Walling Building:** Bricks shall be wetted before being laid and the top of walling where left off shall be wetted before re-commencing building. Walls to be kept wet three days after building. Bricks shall be well buttered with mortar before being laid and the brickwork carried up evenly course so that no part is allowed to be carried up more than 90cm higher at any time than any other part. **Cavity Walling Building** The two layer of half brick wall with half brick cavity is cavity walling of the building. Bricks shall be wetted before being laid and the top of walling where left off shall be wetted before re-commencing building. Each left brick wall shall be connected by 10G GI links made as per design at every five course vertically and at the 60cm

		spacing horizontally or as per drawing. The two courses below sill will be solid wall. One or both half brick wall will be laid in fair face in stretcher bond. The walls are to be kept wet three days after building. Bricks shall be well buttered with mortar before being laid and the brickwork carried up evenly course-by-course so that no part is allowed to be carried up more than 90cm higher at any time than any other part. **Setting out Walling** The contractor shall provide proper setting- out rods and set out all work on it for corners, openings, heights, etc. And shall build the walls and piers etc. To the width, depth and height indicated on the drawings and as directed and approved by the Engineer in-charge. **Bonding Walls** Load bearing brickwork generally shall be of Quota bond (nominal thickness 350mm) and reinforced as shown on the detailed drawings. One brick walls (nominal thickness 230mm) shall be in English bond and half brick walls (nominal thickness 115mm) in Stretcher bond. No broken bricks or bats shall be used unless required to from bond. All propounds, quoins, reveals and other angles of walls shall be built strictly true and square. Cement &sand shall be as before specified. Lime shall be freshly burnt lime slaked at least one month before being used by drenching with water, well broken up and mixed and the slurry passed through a 3mm mesh screen to remove all lumps and impurities. **Filling for Brick work** Where brickwork cavities are specified to contain reinforcing bars they shall be filled with concrete mix as previously described. The filling shall be placed and consolidated in section not exceeding 90cm in height. Cavities that are to be filled shall be kept free of all mortar dropping. **Brick Lintels** Lintels over doors and under openings except where in concrete, shall be formed in brick work by reinforcing the three concrete immediately above the opening with steel wire reinforcement projecting 45cm at either end of the opening and the rates are to include for any necessary centring. **Putlog Holes** All putlog holes shall be not less than one course deep and carefully filled with bricks cut to fit size of opening with beds and joints filled with mortar well tamped in after scaffolding is removed. **Keeping Clean** The contractor shall allow in his rates for keeping the fair-faced brickwork free from mortar at all times and for cleaning the work at completion. **Construction Joints between Walls** Where Construction joints indicated on the drawings should be filled by 25*100m flexible jute carpet coated with bitumen and covered by 16G galvanized steel sheet in exposed faces. All the construction debris shall be removed before placing it.

		Reinforced Brickwork All brickwork shall be reinforced with Torsteel or equivalent reinforcement both horizontally and vertically, as per drawing and instruction of engineer. The reinforcement cleaned of rust and loose flakes with a wire brush, shall be embedded thoroughly in cement mortar at every fourth course. It shall be cast in or securely fixed to adjoining columns or walls, in a manner approved by the Engineer. **Jointing** In jointing, the face joints of the mortar shall be worked out while still green to give a finished surface flush with the face of the brick-work. The faces of brick-work shall be cleaned to remove any splashes of mortar during the course of raising the brick-work. The measurement of brickwork both 230mm (above 230mm, if any) and 115mm thick shall be the product of the length, height and thickness i.e. in cubic meter for chimney made and fair faced machine made brickwork. Deduction for doors, windows and other openings including lintels shall be made to arrive at the net quantity of work. Nothing shall be paid extra for forming such openings. However, no deductions shall be made for areas less than 0.1 sqm. overall, bearing of lintels, beams, girders and hold fasts blocks but nothing extra like form work shall be paid for embedding these. Similarly, no deductions shall be made for chimney flue left in the walls, but nothing extra shall be allowed for rendering for flue openings as specified. Unless otherwise specified nothing extra shall be admissible for cutting shape other than straight or any cutting necessary for shaping the walls to the structural design. Rate shall be inclusive of all necessary scaffolding, watering, cutting of bricks, curing, vertical & horizontal reinforcement within brickwork, materials and labour.
C1	**Machine made Bricks**	Bricks shall be of uniform deep red or copper colour, thoroughly burnt without being vitrified, regular in shape and size and shall have sharp and square sides and edges and parallel faces to ensure uniformity in the thickness of the courses of brickwork. The Brick shall be first class machine made bricks of quality approved by the Engineer and free from grit and other impurities such as lime, iron and other deleterious salts, conforming NS 1 2035/ IS code (latest revision). These shall be well-burnt, sound, and hard with sharp edges and shall emit ringing sound when struck with a mallet. These shall be of uniform size. The size of the bricks shall be 24.0cm x 11.2cm x 5.7cm unless otherwise specified, with a tolerance of ± 3mm in each direction. The compressive strength should be more than 3.5N/mm².
C2	**Chimney made Bricks**	The Brick shall be first class chimney made bricks of quality approved by the Engineer and free from grit and other impurities such as lime, iron and other deleterious salts, conforming NS 1 2035 / IS code (latest revision). These shall be well burnt, sound, and hard with sharp edges and shall emit ringing sound when struck with a mallet. These shall be of uniform size. The size of the bricks shall be 22.9cm x 11.2cm x 5.5cm unless otherwise specified, with a tolerance of ± 3mm in each direction.

		The compressive strength should be 3.5N/mm². The bricks shall be provided with frogs
C3	**Ornamental Brick Works**	**Dachi Bricks** The Brick shall be machine pressed chimney made traditional bricks of first class quality approved by the Engineer and free from grit and other impurities such as lime, iron and other deleterious salts, conforming to NS 1 2035. These shall be well burnt, sound, and hard with sharp edges and shall emit ringing sound when struck with a mallet. These shall be of uniform size. The size of the bricks shall be 21.8cm x 10.0cm x 5.6cm (dachi appa sano) unless otherwise specified, with a tolerance of ± 2mm in each direction. The compressive strength should be more than 3.5N/mm². **Samples** Samples of each type of brick taken at random from the load shall be deposited with the Engineer for his approval before being used in the work. All subsequent deliveries shall be up to the standard of the sample approved. **Mix Proportion** For dachi appa brickwork of 108mm thick, the mortar mix shall be in a proportion of 1:4 i.e. consisting of one part cement and 4 parts sand and finished with surkhi pointing. **Laying Brickwork** All brick shall be built in Stretcher bond. Each brick shall be set with bed and vertical joints filled thoroughly with mortar finished in Surkhi pointing. Selected bricks shall be used for the exposed brickwork. The walls shall be taken up truly plumb. All courses shall be laid truly horizontal and vertical joints shall be truly vertical. Vertical joints in alternate course shall come directly over the other. The thickness of brick courses shall be kept uniform and for this purpose wooden straight edge with graduation giving thickness of each brick course including blade joint (thin joints) shall be used. Necessary tools comprising of wooden straight edge, masons sprit level, square, foot rule, plumb, line and pins etc. shall be frequently and fully used by the masons to ensure that the walls are taken up true to plumb, line and levels. Both the faces of walls of thickness greater than 23cm shall be kept in proper plane. All the connected brickwork shall be carried up nearly at one level and no partition of work shall be raised more than one meter above the rest of the work. Any dislodged brick shall be removed and reset in fresh mortar. Before commencing any brickwork, the Contractor shall confer with other trades to ensure that all pipes, reinforcement bars, conduits, drains, sleeves, bolts, hangers, or any other materials necessary to be installed in the brickwork at the time it is built, have been fixed or provided for. **Surkhi Pointing** Bricks shall be laid such that all joints are filled properly with surkhi pointing. The gap in the joints shall be not more than 1mm and properly pointed during the progress of the work. The face of brickwork shall be kept cleaned and mortar dropping removed. **Putlog Holes**

		The putlog holes (if inevitable for scaffolding), which provide resting space for horizontal members shall not be left in masonry under one metre in width or immediately near the skewbacks of arches. The holes left in the masonry work for supporting the scaffolding shall be filled with bricks filled with mortar to fit the size of opening with proper beds and joints. **Measurements** The measurement of traditional dachi appa work in wall shall be the product of the length x height i.e. in square meter. The measurement of decorative and ornamental traditional brickwork in wall shall be measured in running meter. Deduction for doors, windows and other openings including lintels shall be made to arrive at the net quantity of work. Nothing shall be paid extra for forming such openings. However, no deductions shall be made for areas less than 0.1 sqm overall, bearing of lintels, beams, girders and hold fasts blocks but nothing extra like form work shall be paid for embedding these. Similarly, no deductions shall be made for chimney flue left in the walls, but nothing extra shall be allowed for rendering for flue openings as specified. Unless otherwise specified nothing extra shall be admissible for cutting shape other than straight or any cutting necessary for shaping the walls to the structural design. Rate shall be inclusive of all necessary scaffolding, watering, cutting of bricks, curing, vertical & horizontal reinforcement within brickwork, materials and labour **Payment** The brick works, plastering and pointing shall be paid at their respective contract unit rate which shall be the full and the final compensation to the Contractor as per Clause 112 to complete the work as per these Specifications.
C4	**Rat Trap Bond Brick Masonry**	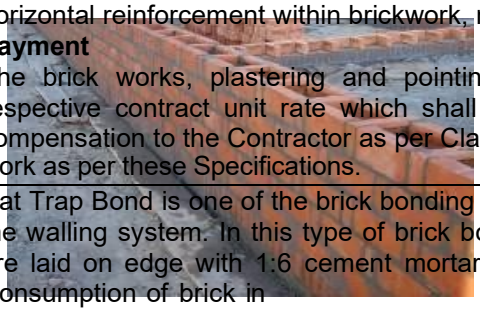 Rat Trap Bond is one of the brick bonding construction techniques in the walling system. In this type of brick bond techniques, the bricks are laid on edge with 1:6 cement mortar as shown in the figure. Consumption of brick in Rat Trap Bond is reduced by 25-30 % (depending on the thickness of brick). Due to this reduction in number of bricks, the consumption of cement mortar is also reduced to 55% (45% cement and 50% sand is saved as compared to normal English Bond and Flemish Bond brick wall). The bond acts as a good thermal insulator due to cavity in between. Plastering on the outer wall may not require due to the attractive appearance. CO_2 emission in Rat trap bond in $1m^3$ brick work is 820/27.5 x 2.2= 65.5 kg of CO_2 against 1236/27.5 x 2.2 = 99 kg of CO_2 in normal English Bond. General masonry specifications apply.

C6, C7, C8, C9	**Stone Masonry Works**	The stones to be used shall be durable and angular in shape. If boulders are used they shall be broken into angular pieces. The stones shall be sound, hard, and free from iron bands, spots, sand holes, flaws, shakes, cracks or other defects. The stone shall not absorb water more than 5 per cent. The specific gravity of the stone shall not be less than 2.50. Except otherwise described in the contract, the length of any stone shall not exceed three times its height. The breadth of the stone on the bed shall not be less than 150 mm nor greater than 3/4 the thickness of the wall. At least 85% of the stones used in masonry, except those used for chinking as chips or spalls of stones shall have individual volumes of more that 0.01 m3 The chips or spalls used including voids in the dry stone masonry shall not be more than 20% of the stone masonry by volume. In case of mortared masonry the total volume of mortar and spalls taken together shall not be more than 30% of the mortared masonry. Representative samples of the stones intended for use in the works shall be submitted to the Engineer for prior approval. Further representative samples shall be submitted for approval whenever there is a change in the type or strength of the rock that the Contractor intends to use in masonry work. **Mortar** Mortar for masonry shall conform to provisions under brick works. **Construction** The method of construction described herein shall hold good in all Clauses of this Section, wherever applicable. **General** Construction shall be carried out in accordance with I.S. 1597-1992, Code of Practice for construction of stone masonry, Part 1 Rubble stone masonry or Part 2 Ashlar Masonry as appropriate. All stratified stone possessing bedding planes shall be laid with its natural bed as nearly as possible at right angles to the direction of load. In the case of arch rings, the natural bed shall be radial. Facework groins shall be built to a height not exceeding one meter in advance of the main body of the work and adjacent walling stepped down on either side. Masonry face work between the groins shall then be built to a height not exceeding 500 mm above the backing which shall then be brought up level with the completed facework. At no time shall the backing be built up higher than the facework.
		Except for dry rubble walling, all joints (gaps) shall be sufficiently thick to prevent stone to stone contact and the gaps shall be completely filled with mortar. Stones shall be clean and sufficiently wetted before laying to prevent absorption of water from mortar. Placing loose mortar on the course and pouring water upon it to fill the gaps in stones shall not be allowed. Mortar shall be fluid, mixed thoroughly and then poured in the joints. No dry or hollow space shall be left anywhere in the masonry and each stone shall have all its faces completely covered with mortar of the thickness as specified for joints. The bed which is to receive the stone shall be cleaned, wetted and covered with a layer of fresh mortar. All stones shall be laid full in

		mortar both in bed and vertical joints and settled carefully in place with a wooden mallet immediately after placement and solidly embedded in mortar before it has set. Clean and wet chips and spalls shall be wedged into the mortar joints and bed whenever necessary to avoid thick joints or bed of mortar. When the foundation masonry is laid directly on rock, the bedding face of the stones of the first course shall be dressed to fit into rock snugly when pressed down in the mortar bedding over the rock. For masonry works over rock, a levelling course of M15/40 or M15/20 concrete 100mm thickness shall be laid over rock and then stone masonry work shall be laid without foundation concrete block. In case, any stone already set in mortar is disturbed or the joints broken, it shall be taken out without disturbing the adjoining stones and joints. Dry mortar and stones thoroughly cleaned from the joints and the stones shall be reset in fresh mortar. Sliding one stone on top of another which is freshly laid shall not be allowed. Shaping and dressing of stone shall be done before it is laid in the work. Dressing and hammering of the laid stones which will loosen the masonry shall not be allowed. Building up face wall tied with occasional through stones and filling up the middle with stones spalls and chips or dry packing shall not be allowed. Vertical joints shall be staggered. Distance between the nearer vertical joints of upper layer and lower layer in coursed rubble masonry shall not be less than half the height of the course. Masonry in a structure between two expansion joints shall be carried up nearly at one uniform level throughout but when breaks are unavoidable the masonry shall be raked in sufficiently long steps to facilitate jointing of old and new work. The stepping of raking shall not be more than 45 degrees with the horizontal. Masonry shall not be laid when the air temperature in the shade is less than 3°C. Newly laid masonry shall be protected from the harmful effects of weather. **Ashlar** All stones shall be dressed to accurate planes on the beds and joints and they shall be fair and neatly or fine tooled on the face unless otherwise described in the contract. **Block-In-Course** Beds and joints shall be squared and dressed for a distance of at least 220 mm from the exposed face. Bond stones shall form at least one sixth of the area of the exposed face and shall extend at least 900 mm into the wall or for the full thickness of the wall if the latter is less than 900 mm. Unless described in the contract as tooled or drafted, the exposed face of all stones shall be blocked and left rough. Arises shall be dressed square at all beds and joints. **Square Rubble-Coursed Or Broken Courses** All stones shall be truly squared and dressed for a distance at least 120 mm from the face of the wall. Bond stones shall be provided at the rate of at least one to every 0.8 m2 of exposed face and shall measure not less than 150 mm x 150 mm on the face and not less than 450 mm in length or the full thickness of the wall, whichever is

		the less. Vertical joints in any layer shall be broken in the next layer and the horizontal lapping of the stones shall not be less than 100 mm. **Random Rubble - Coursed Or Uncoursed** All stones shall be carefully set with a bond stone provided at the rate of at least one to every 0.9 m2 of exposed face. Bond stones shall measure not less than 150 mm x 150 mm on the exposed face and not less than 450 mm in length or the full thickness of the wall, whichever is the less. **Dry Random Rubble** Dry random rubble masonry shall be constructed generally to the requirements of coursed random rubble masonry but with the omission of mortar. All stones shall be carefully shaped to obtain as close a fit as possible at all beds and joints, any interstices between the stones being filled with selected stone spalls. The stones in courses shall be laid perpendicular to the batter face. The exposed tops or capings of dry rubble structures shall be formed as shown on the Drawing. **Composite Random Rubble** Materials for composite random rubble shall comply with relevant Clauses. The dry stone insets shall be constructed when the level of the surrounding mortared masonry surround has reached the top of the dry stone inset. **Test And Standard Of Acceptance** Before laying any mortar, the Contractor shall make six sets of mortar test cubes from each source of sand to demonstrate the compliance of the mix to the specified strength. Each set shall comprise six cubes, three to be tested at 7 days and the other to be tested at 28 days. During construction, the Contractor shall make and test mortar cubes at the rate of three cubes for every 10 m3 of masonry to assess the strength subject to a minimum of 3 cubes samples for a days work. Testing of cubes shall be in accordance with IS 2250. The stones shall be tested for the water absorption as per IS: 1124 and it shall not be more than 5 percent. The stones shall also be tested for Specification gravity and it shall not be less than 2.65. Sand shall be tested as directed by the Engineer. At least 3 set of tests for stone and sand shall be conducted for every source. About one square meter (1mx1m) measured in front face of the completed stone masonry in every 200 sq.m or part of it shall be dismantled during the process of construction up to complete depth and the aggregate volume of the stones having volume more than 0.01m3 shall be obtained by the method of displacement of water to find the volume of spalls and mortars in the case of mortared masonry and the volume of spalls and voids in the case of dry masonry. The dismantling shall be made in such a manner that the quality of the surrounding work is least affected. While dismantling, the tightness of the joints shall also be compared with the thickness of joints as specified for assessment of the quality of work. If the volume of spalls and mortars is more than the specified volume and/or the joints are not filled completely with mortar, then the entire work which the sample and test represent shall be rejected.

		The dismantled portion shall be made good by the Contractor at his own cost after completion of the test. **Measurement** Stone masonry shall be measured in cubic meters. The pointing shall be measured in sq.m. **Payment** The stone masonry shall be paid at the respective contract unit prices which shall be the full and the final compensation to the Contractor
C10	**Stone Filling Works**	Stone filling shall be done as stone masonry works in general but with the omission of mortar. All stones shall be carefully shaped to obtain as close a fit as possible at all beds and joints, any interstices between the stones being filled with selected stone spalls. The stones in courses shall be laid perpendicular to the batter face.
C11	**Glass Block**	Glass blocks: Solid or hollow Glass blocks of 190mm x 190mm x 80mm or size as specified and of approved color and shape and shall be used. Blocks shall be made from structural glass annealed to withstand rigorous use of material. The bricks shall be impervious to grease, chemicals, moisture and shall not change its color with age. **Mortar:** 1 part Portland Cement, 1 part lime, and 4-1/2 to 6 times parts of fine sand passing No. 20 sieve and free of iron compounds to avoid stains; add integral type waterproofed to increase waterproof qualities of the mortar. Mortar shall be mixed drier than normal and only an amount that will be used in 1/2 to 1 hour. Glass block will not absorb water the same as brick. Re-tempered mortar shall not be use in any case. **Installation** Surfaces shall be cleaned thoroughly prior to installation. Glass block panels shall be installed into four side prepared opening, shall never be made to carry loads other than their own weight. Glass blocks shall not be tapped with steel tools. Glass block panels shall never be freestanding. Masonry with glass blocks more than 30 mm high, every horizontal joint should be reinforced with galvanized expanded metal strips. Blocks masonry shall not exceed 9m2 (vertical dimension not to exceed 3m) Uniform joint width of 1/4 inch (6 mm) plus or minus 1/8 inch (3 mm). shall be maintained with maximum variation from plane of unit to next unit - 1/32 inch (.80 mm) and maximum variation of panel from plane - 1/16 inch (1.6 mm).When mortar has set, pack backer rod in jamb and head channels. Recess to allow for sealant. The construction shall be so executed that there is complete freedom of movement of the panel within the inframing members. Provision for expansion shall be made along the jambs and the head of each panel and there shall be proper anchorage of panel at head, sill and jamb.

		Cleaning Remove excess mortar from glass surfaces with a damp cloth before set occurs. The glass block wall shall be left clean and unblemished condition. The residue of cement on the glass surface let from mortar/ tiling grout shall be removed by use of proprietary cement stain remover. Hydrofluoric acid or derivatives must not be used. No scratch marks of blades shall be seen in the glass surface. **Protection** Protect installed products shall be protected until completion of project. Damaged products shall be Touched-up, repaired or replaced before Substantial Completion **Measurement/ payment** Measurement shall be in square meter for specified thickness of masonryor nos of glass blocks as specified in the BOQ. Rate shall include materials, mixing, laying, finishing, and labour etc., all complete.
11. D. Concrete Works		
D1-D8	**General**	**Mixing Concrete** Before any batching, mixing, transporting, placing, compacting and finishing and curing the concrete ordered or delivered to site, the Contractor shall submit to the Engineer full details including Drawing of all the plant which he proposes to use and the arrangements he proposes to make. Concrete for the works shall be batched and mixed in one or more plants or concrete mixer unless the Engineer agrees to some other arrangement. If concrete mixers are used, there shall be sufficient number of mixtures including stand by mixers. Batching and mixing plants shall be complying with the requirements of IS 1791 and capable of producing a uniform distribution of the ingredients throughout the mass. Truck mixers shall comply with the requirements of IS 4925 and shall only be used with the prior approval of the Engineer. If the plant proposed by the Contractor does not fall within the scope of IS 1791 it shall have been tested in accordance with IS 4634 and shall have a mixing performance within the limits of IS 1791. All mixing operations shall be under the control of an experienced supervisor. The aggregate storage bins shall be provided with drainage facilities arranged so that the drainage water is not discharged to the weigh hoppers. Each bin shall be drawn down at least once per week and any accumulations of mud or silt shall be removed. If bulk cement is used, the scale and weight hopper for cement shall be distinct from the scale and weight hopper for aggregates. Cement and aggregates shall be batched by weight. Water may be measured by weight or volume. The weighing and water dispensing mechanisms shall be maintained in good order. Their accuracy shall be maintained within the tolerances described in IS 1791 and not more than plus or minus one

		percent, and checked against accurate weights and volumes when required by the Engineer. The weights of cement and of each size of aggregate and the weight or volume of water as indicated by the mechanism employed shall be within a tolerance of plus or minus three per cent of the respective weight per batch agreed by the Engineer. The Contractor shall provide standard test weights at least equivalent to the maximum working load used on the most heavily loaded scale and other auxiliary equipment required for checking the satisfactory operation of each scale or measuring device. Tests shall be made by the Contractor in the presence of the Engineer during the site trials described in Sub-clause 604 (4) and then at intervals to be determined by the Engineer but not less than once per three months. The Contractor shall furnish the Engineer with copies of the complete results of all check tests and shall make any adjustments, repairs or replacements necessary to ensure satisfactory performance. The nominal drum or pan capacity of the mixer shall not be exceeded. The turning speed and the mixing time shall be as recommended by the manufacturer, but in addition, when water is the last ingredient to be added, mixing shall continue for at least one minute after all the water has been added to the drum or the pan. The blades of pan mixers shall be maintained within the tolerances specified by the manufacturer of the mixer and the blades shall be replaced when it is no longer possible to maintain the tolerances by adjustment. Mixers shall be fitted with an automatic recorder registering the number of batches discharged. The water to be added to the mix shall be reduced by the amount of free water contained in the coarse and fine aggregates. This amount shall be determined by the Contractor by a method agreed by the Engineer immediately before mixing begins each day and thereafter at least once per hour and for each delivery of aggregates during concreting. When the correct quantity of water, determined as set out in the Specification, has been added to the mix, no further water shall be added, either during mixing or subsequently. Mixers which have been out of use for more than 30 minutes shall be thoroughly cleaned before any fresh concrete is mixed. Mixers shall be cleaned out before changing to another type of cement. **Transportation Of Concrete** The concrete shall be discharged from the mixer and transported to the works by means which shall prevent adulteration, segregation or loss of ingredients, and shall ensure that the concrete is of the required workability at the point and time of placing. The loss of slump between discharge from the mixer and placing shall be within the tolerances. The capacity of the means of transport shall not be less than the full volume of a batch. The time elapsing between mixing transporting placing and compaction altogether of a batch of concrete shall not be longer than the initial setting time of the concrete. If the placing of any batch of

		concrete is delayed beyond this period, the concrete shall not be placed in the works. **Placing Of Concrete** **Consent for Placing** Concrete shall not be placed until the Engineer's consent has been given in writing. The Contractor shall give the Engineer at least two full working day notice of his intention to place concrete. If concrete placing is not commenced within 24 hours of the Engineer's consent the Contractor shall again request consent as specified above. **Preparation of Surface to Receive Concrete** Excavated surfaces on which concrete is to be deposited shall be prepared as set out in relevant Section Existing concrete surfaces shall be prepared before deposition of further concrete they shall be clean, hard and sound and shall be wet but without any free-standing water. Any flow of water into an excavation shall be diverted through proper side drains to a sump or be removed by other suitable method which will prevent washing away the freshly deposited concrete or any of its constituents. Any under drain constructed for this purpose shall be completely grouted up when they are no longer required by a method agreed by the Engineer. Unless otherwise instructed by the Engineer surfaces against which concrete is to be placed shall receive prior coating of cement slurry or mortar mixed in the proportions similar to those of the fines portion in the concrete to be placed. The mortar shall be kept ahead of the concrete. The mortar shall be placed into all parts of the excavated surface and shall not be less than 5 mm thick. If any fissures have been cleaned out they shall be filled with mortar or with concrete as instructed by the Engineer. The amount of mortar placed at one time shall be limited so that it does not dry out or set before being covered with concrete. **Placing Procedures** The concrete shall be deposited as nearly as possible in its final position. It shall be placed so as to avoid segregation of the concrete and displacement of the reinforcement, other embedded items or formwork. It shall be brought up in layers approximately parallel to the construction joint planes and not exceeding 300 mm in compacted thickness unless otherwise permitted or directed by the Engineer, but the layers shall not be thinner than four times the maximum nominal size of aggregate. When placing on a nearly horizontal surface, placing shall start at the lower end of the surface to avoid de-compaction of concrete. Layers shall not be placed so that they form feather edges nor shall they be placed on a previous layer which has taken its initial set. In order to comply with this requirement, another layer may be started before initial set of the preceding layer. All the concrete in a single bay or pour shall be placed as a continuous operation. It shall be carefully worked round all obstructions, irregularities in the foundations and the like so that all parts are completely full of compacted concrete with no segregation or

		honey combing. It shall also be carefully worked round and between water stops, reinforcement, embedded steelwork and similar items which protrude above the surface of the completed pour. All work shall be completed on each batch of concrete before its initial set commences and thereafter the concrete shall not be disturbed before it has set hard. No concrete that has partially hardened during transit shall be used in the works and the transport of concrete from the mixer to the point of placing shall be such that this requirement can be complied with. Concrete shall not be placed during rain which is sufficiently heavy or prolonged to wash mortar from coarse aggregate on the exposed faces of fresh concrete. Means shall be provided to remove any water accumulating on the surface of the placed concrete. Concrete shall not be deposited into such accumulations of water. In dry weather, covers shall be provided for all fresh concrete surfaces which are not being worked on. Water shall not be added to concrete for any reason. When concrete is discharged from the place above its final deposition, segregation shall be prevented by the use of chutes, down pipes, trunking, baffles or other appropriate devices. Forms for walls shall be provided with openings or other devices that will permit the concrete to be placed in a manner that will prevent segregation and accumulations of hardened concrete on the formwork or reinforcement above the level of the placed concrete. When it is necessary to place concrete under water the Contractor shall submit to the Engineer his proposals for the method and equipment to be employed. The concrete shall be deposited either by bottom-discharging watertight containers or through funnel-shaped tremies which are kept continuously full with concrete in order to reduce to a minimum the contact of the concrete with the water. Special care shall be taken to avoid segregation. If the level of concrete in a tremie pipe is allowed to fall to such extent that the water enters the pipe, the latter shall be removed from the pour and filled with concrete before being again lowered into the placing position. During and after concreting under water, pumping or de-watering in the immediate vicinity shall be suspended if there is any danger that such work will disturb the freshly placed concrete. **Interruptions to Placing** If the concrete placing is interrupted for any reason and the duration of the interruption cannot be forecast or is likely to be prolonged, the Contractor shall immediately take the necessary action to form a construction joint so as to eliminate as far as possible feather edges and sloping top surfaces and shall thoroughly compact the concrete. All work on the concrete shall be completed before elapse of initial setting time and it shall not thereafter be disturbed until it is hard enough to resist damage. Plant and materials to comply with this requirement shall be readily available at all time during concrete placing. Before concreting is resumed after such an interruption the Contractor shall cut out and remedy all damaged or un-compacted concrete,

		feather edges or any undesirable features and shall leave a clean sound surface against which the fresh concrete may be placed. If it becomes possible to resume concrete placing without contravening the Specification and the Engineer consents to resumption, the new concrete shall be thoroughly worked in and compacted against the existing concrete so as to eliminate any cold joints. In case of long interruption concrete shall be resumed as directed by Engineer. **Dimensions of Pours** Unless otherwise agreed by the Engineer, pours shall not be more than two meters high and shall as far as possible have a uniform thickness over the plan area of the pour. Concrete shall be placed to the full planned height of all pours except in the circumstances described. The Contractor shall plan the dimensions and sequence of pours in such a way that cracking of the concrete does not take place due to thermal or shrinkage stresses. **Placing Sequence** The Contractor shall arrange that the intervals between successive lifts of concrete in one Section of the works are of equal duration. This duration shall not be less than three days or not more than seven days under temperate weather conditions unless otherwise agreed by the Engineer. Where required by the Engineer to limit the opening of construction joints due to shrinkage, concrete shall not be placed against adjacent concrete which is less than 21 days old. Contraction gaps in concrete shall be of the widths and in the locations as shown on the Drawing and they shall not be filled until the full time interval shown on the Drawing has elapsed. **Compaction Of Concrete** Concrete shall be fully compacted throughout the full extent of the placed layer. It shall be thoroughly worked against the formwork and around any reinforcement and other embedded item, without displacing them. Care shall be taken at arises or other confined spaces. Successive layers of the same pour shall be thoroughly worked together. Concrete shall be compacted with the assistance of mechanical immersion vibrators, unless the Engineer agrees another method. Immersion and surface vibrators shall operate at a frequency of between 70 and 200 hertz. The Contractor shall ensure that vibrators are operated at pressures and voltages not less than those recommended by the manufacturer in order that the compactive effort is not reduced. A sufficient number of vibrators shall be operated to enable the entire quantity of concrete being placed to be vibrated for the necessary period and, in addition, stand-by vibrators shall be available for instant use at each place where concrete is being placed. Vibration shall be continued at each point until the concrete ceases to contract, air bubbles have ceased to appear, and a thin layer of mortar has appeared on the surface. Vibrators shall not be used to move concrete laterally and shall be withdrawn slowly to prevent the

		formation of voids. The vibrators shall be inserted vertically into the concrete to penetrate the layer underneath at regular spacing which shall not exceed the distance from the vibrator over which vibration is visibly effective and some extent of vibration is overlapped. Vibration shall not be applied by way of reinforcement nor shall the vibrators be allowed to touch reinforcement, sheathing ducts or other embedded items. **Coarse Aggregate** As per item (4) page 31 **Fine Aggregate** As per item (3) page 31 **Cement** As per item (2) page 30 **Water** As per item (7) page 33 **Tests** **Regular Slump test should be carried out to control the addition of water and to maintain required consistency.** **Curing Of Concrete** **General** Concrete shall be protected during the first stage of hardening from loss of moisture and from the development of temperatures differentials within the concrete sufficient to cause cracking. The methods used for curing shall not cause damage of any kind to the concrete. Curing shall be continued for as long as may be necessary to achieve the above objectives but not less than seven days or until the concrete is covered by successive construction whichever is the shorter period. The above objectives shall be dealt with but nothing shall prevent both objectives being achieved by a single method where circumstances permit. The curing process shall commence as soon as the concrete is hard enough to resist damage from the process. In the case of large areas or continuous pours, it shall commence on the completed Section of the pour before the rest of the pour is finished. **Loss of Moisture** Exposed concrete surfaces shall be closely covered with impermeable sheeting, properly secured to prevent its removal by wind and the development of air spaces beneath it. Joints in the sheeting shall be lapped by at least 300 mm. If it is not possible to use impermeable sheeting, the Contractor shall keep the exposed surfaces continuously wet by means of water spray or by covering with a water absorbent material which shall be kept wet, unless this method conflicts with provisions of relevant Sub-clause. Water used for curing shall be of the same quality as that used for mixing.

		Formed surfaces may be cured by retaining the formwork in place for the required curing period. If instructed by the Engineer, the Contractor shall, in addition to the curing provisions set out above provide a suitable form of shading to prevent the direct rays of the sun reaching the concrete surfaces for at least the first four days of the curing period. **Limitation of Temperature Differentials** The Contractor shall limit the development of temperature differentials in concrete after placing by any means appropriate to the circumstances including the following: Limiting concrete temperatures at placing); Use of low heat cement for mass concreting, subject to the agreement of the Engineer; Leaving formwork in place during the curing period. Steel forms shall be suitably insulated on the outside; Preventing rapid dissipation of heat from surfaces by shielding from wind. **Protection Of Fresh Concrete** Freshly placed concrete shall be protected from rainfall and from water running over the surface until it is sufficiently hard to resist damage from these causes. Concrete placed in the works shall not be subjected to any loading including traffic until it has attained at least its characteristic strength. **Concreting In Hot Weather** **General** The Contractor shall prevent damage to concrete arising from exposure to extreme temperatures, and shall maintain in good working order all plant and equipment required for this purpose. In the event that conditions become such that even with the use of equipment the requirements cannot be met, concrete placing shall immediately cease until such time as the requirements can again be met. **Concrete Placing in Hot Weather** During hot weather the Contractor shall take all measures necessary to ensure that the temperature of concrete at the time of placing in the works does not exceed 30°C and that the concrete does not lose any moisture during transporting and placing. Such measures may include but are not necessarily limited to the following:- Shielding aggregates from direct sunshine. Use of a mist water spray on aggregates. Sun shields on mixing plants and transporting equipment. Surfaces in which concrete is to be placed shall be shielded from direct sunshine and surfaces shall be thoroughly wetted to reduce absorption of water from the concrete placed on or against them. After concrete has been placed, the selected curing process shall be commenced as soon as possible. If any interval occurs between completion of placing and start of curing, the concrete shall be closely covered during the interval with polythene sheet to prevent loss of moisture. **Construction Joints** Whenever concrete is to be bonded to other concrete which has

		hardened, the surface of contact between the Sections shall be deemed a construction joint. Where construction joints are shown in the Drawing, the Contractor shall form such joints in such positions. The location of joints which the Contractor requires to make for the purpose of construction shall be subject to the approval of the Engineer. Construction joints shall be in vertical or horizontal planes except in sloping slabs where they shall be normal to the exposed surface or elsewhere where the Drawing requires a different arrangement. Construction joints shall be arranged as to reduce to a minimum the effects of shrinkage in the concrete after placing, and shall be placed in the most advantageous positions with regard to stresses in the structures and the desirability of staggering joints. Feather edges of concrete at joints shall be avoided. Any feather edges which may have formed where reinforcing bars project through a joint shall be cut back until sound concrete has been reached. The intersections of horizontal and near horizontal joints and exposed faces of concrete shall appear as straight lines produced by use of a guide strip fixed to the formwork at the top of the concrete lift, or by other means acceptable to the Engineer. Construction joints formed as free surfaces shall not exceed a slope of 20 per cent from the horizontal. The surface of the fresh concrete in horizontal or near horizontal joints shall be thoroughly cleaned and roughened by means of high pressure water, and air jets or wire brush, when the concrete is hard enough to withstand the treatment without the leaching of cement. The surface of vertical or near vertical joints shall be similarly treated if circumstances permit the removal of formwork at a suitable time. Where concrete has become too hard for the above treatment to be successful, the surface whether formed or free shall be thoroughly scrabbled by mechanical means, manually or wet sand blasted and then washed with clean water. The indentations produced by scrabbling shall not be less than 10 mm deep and shall be away from the finished face by 40mm. If instructed by the Engineer the surface of the concrete shall be thoroughly brushed with a thin layer of mortar composed of one part of cement to two parts of sand by weight immediately prior to the deposition of fresh concrete. The mortar shall be kept just ahead of the fresh concrete being placed and the fresh layer of concrete shall be thoroughly and systematically vibrated to full depth to ensure complete bond with the adjacent layer. No mortar or concrete shall be placed until the joint has been inspected and approved by the Engineer. **Records Of Concrete Placing** Records of the details of every pour of concrete placed in the works shall be kept by the Contractor in a form agreed by the Engineer. These records shall include class of concrete, location of pour, date and duration of pour, ambient temperature and concrete temperature at time of placing and all relevant meteorological information such as rain, wind etc., moisture contents of the aggregates, details of mixes,

		batch numbers, cement batch number, results of all tests undertaken, part of the structure and place where test cube samples are taken from. The Contractor shall supply to the Engineer four copies of these records each week covering work carried out the preceding week. In addition he shall supply to the Engineer monthly histograms of all 28 day cubes strength results together with cumulative and monthly standard deviations, Coefficient of Variation, and any other information which the Engineer may require concerning the concrete placed in the works. **No Fines Concrete** No Fines concrete (NF concrete) is intended for use where a porous concrete is required and shall only be used where shown on the Drawing or instructed by the Engineer. The mix shall consist of Ordinary Portland cement and aggregate complying with this Specification. The aggregate size shall be 40 mm to 10 mm only. The weight of cement mixed with 0.3 cubic meters of aggregate shall not be less than 50 kg. The quantity of water shall not exceed that required to produce a smooth cement paste which will coat evenly the whole of the aggregate. **Hand Mixed Concrete** Concrete for structural purposes shall not be mixed by hand. Where non structural concrete is required, hand mixing may be carried out subject to approval of the Engineer. For making hand mixed concrete, cement, sand and aggregate shall be batched separately by volume or by weight as applicable.Mixing shall be done in masonary platform or sheet iron tray. Then cement and sand shall be mixed dry to uniform colour. The aggregate shall be stacked in a proper shape upon which cement sand mix shall be spread and whole mix shall be turned up and down to have uniform mix of all ingredients. Then water shall be added and shall be mixed to uniform consistency. For hand mixed concrete the specified quantities of cement shall be increased by 10% and not more than 0.25 cubic meters shall be mixed at one time. During windy weather precautions shall be taken to prevent cement from being blown away in the process of gauging and mixing. **Early Loading** No load shall be applied to any part of a structure until the specified curing period has expired, and thereafter loading shall be allowed after approval by the Engineer. The Engineer's decision shall be based on the type of load to be applied, the age of concrete, the magnitude of stress induced and the propping of the structure. No structure shall be opened to traffic until test cubes have attained the specified minimum 28 days strength **Measurement** **Concrete** Concrete laid in place as specified in the Drawing or directed by the Engineer shall be measured in cubic meter separately for each class. No deduction shall be made in the measurement for: bolt holes, pockets, box outs an cast in components provided that the volume of each is less than 0.15 cubic meters;

		mortar beds, fillets, drips, rebates, recesses, grooves, chamfers and the like of 100 mm total width or less; reinforcement **Blinding Concrete/Non Structural Concrete** Blinding concrete laid in place shall be measured in cubic meter. No deduction shall be made for openings provided that the area of each is less than 0.5 square meters. Blinding concrete over hard material shall be measured as the volume used provided that the maximum thickness of 150 mm allowed for over break is not exceeded. **Admixtures, Workability and Hardening Agents** Measurement of these items shall be carried out as specified in the contract. **Concrete** Every class of concrete shall be paid as per respective contract unit rate. The respective rate shall also include the cost of: Admixtures and workability agents including submission of details unless specified. Class of UF1,2 or 3 surface finish. Laying to sloping surfaces not exceeding 15° from the horizontal and to falls. Formwork to lean concrete. Placing and compacting against excavated surfaces where required including any additional concrete to fill over break and working space. Complying with the requirements of Clauses 2001 to 2013,1806 and 1807. **Admixtures, Workability and Hardening Agents** Payment shall be made at contract unit rate which shall be the full and the final compensation to the Contractor for all specified in the contract.
D1	**Non-structural Concrete**	Non-structural concrete (NS concrete) shall be used only for non structural purposes where shown on the Drawing. NS concrete shall be compound of ordinary Portland cement and aggregates complying with this Specification. The weight of cement mixed with 0.3 cubic meters of combined aggregate shall not be less than 50 kg. The mix shall be proportioned by weight or by volume. The maximum aggregate size shall be 40 mm nominal. The concrete shall be mixed by machine or by hand to a uniform colour and consistency before placing. The quantity of water used shall not exceed that required to produce a concrete with sufficient workability to be placed and compacted where required. The concrete shall be compacted by hand towels or rammers or by mechanical vibration.
D9	**Reinforcement**	Reinforcement as plain bars and deformed bars and steel fabric shall comply with the following Indian Standards. IS 1786 for high strength deformed steel bars and wires. IS 1566 for steel mesh fabric. IS 432 mild steel and medium tensile steel bars. All reinforcement shall be from an approved manufacturer and, if required by the Engineer, the Contractor shall submit the ISI

		certification mark or other test certificate from the manufacturer acceptable to the Engineer. The Contractor shall furnish all information as manufacturer's certificate, invoice, and other relevant details to ensure the quality of steel. The reinforcements shall have no crack, scale or rust or foreign particles that will destroy or reduce the bond. The bars shall be accurately bent and formed to the dimension indicated in the Drawings. The Contractor shall prepare bending schedules for each structure and calculate the weight of the reinforcement. The schedule of bars and the calculations shall be submitted to the Engineer for approval. Binding wire used to bind reinforcements shall be annealed galvanized binding wire of 20 gauges. The sampling and frequency of testing shall be as set out in the NS 84-2042 and NS 191-2045. All reinforcement not complying with the Specification shall be removed from site. **Storage of Reinforcement** All reinforcement shall be delivered to site either in straight lengths or cut and bent. No reinforcement shall be accepted in long lengths which have been transported bent over double. Any reinforcement which is likely to remain in storage for a long period shall be protected from the weather so as to avoid corrosion and pitting. All reinforcement which has become corroded or pitted to an extent which, in the opinion of the Engineer, will affect its properties shall either be removed from site or may be tested for compliance with the appropriate Indian Standard at the Contractor expense. Reinforcement shall be stored at least 150mm above the ground on a clean area free of mud and dirt and sorted out according to category, quality and diameter. **Bending Reinforcement** Unless otherwise shown on the Drawing, bending and cutting shall comply with IS 2502. The Contractor shall satisfy himself as to the accuracy of any bar bending schedules supplied and shall be responsible for cutting, bending, and fixing the reinforcement in accordance with the Drawing. Bars shall be bent mechanically using appropriate bar benders. Bars shall be bent cold by the application of slow steady pressure. At temperatures below 5°C the rate of bending shall be reduced if necessary to prevent fracture in the steel. Bending reinforcement inside the forms shall not be permitted except for mild steel bars of diameter less or equal to 12 mm, when it is absolutely necessary. After bending, bars shall be securely tied together in bundles or groups and legibly labelled as set out in IS 2502. **Fixing Reinforcement** Reinforcement shall be thoroughly cleaned. All dirt, scale, loose rust, oil and other contaminants shall be removed before placing it in position. If the reinforcement is contaminated with concrete from previous operations, it shall be cleaned before concreting in that Section. Reinforcement shall be securely placed and fixed in position as shown in the drawing or directed by the Engineer.

		Unless otherwise agreed by the Engineer, all intersecting bars shall be either tied together with not less than 1.6 mm diameter soft annealed iron wire and the end of the wire turned into the body of the concrete, or shall be secured with a wire clip of a type agreed by the Engineer. Spacer blocks shall be used for ensuring that the correct cover is maintained on the reinforcement. Blocks shall be as small as practicable and of a shape agreed by the Engineer. They shall be made of mortar mixed in the proportions of one part of cement to two parts of sand by weight. Wires cast into the block for tying in to the reinforcement shall have not less than 1.6 mm diameter and shall be soft annealed iron. Alternatively another type of spacer block may be used subject to the Engineer's approval. All reinforcement shall be checked of shape, size, diameter and number where necessary. Reinforcement shall be rigidly fixed so that it remains intact during placing of concrete. Any fixers Made to the formwork shall not remain within the space to be occupied by the concrete being placed. No splices shall be made in the reinforcement except where shown on the Drawing or agreed by the Engineer. Splice lengths shall be as shown on the Drawing or directed by the Engineer. Reinforcement shall not be welded except where required by the contract or agreed by the Engineer. If welding is employed, all welded splices shall be full penetration butt welds complying with the procedures set out in IS 2751 or IS 9417 as applicable. Mechanical splices shall not be used unless the Engineer agrees otherwise. Acceptance for welded or mechanical splices of approved design shall be based on qualification tests to be carried out by the Contractor: prior to start of the work. Construction control testing as instructed by the Engineer shall be also carried out. The Contractor shall ensure that reinforcement left exposed in the works shall not suffer distortion, displacement or other damage. When it is necessary to bend protruding reinforcement aside temporarily, the radius of the bend shall not be less than four times the bar diameter for mild steel bars or six times the bar diameter for high yield bars. Such bends shall be carefully straightened without leaving residual kinks or damaging the concrete round them before concrete placing. In no circumstances heating and bending of high yield bars shall be permitted. Bars complying with IS 1786 or other high tensile bars shall not be bent after placing in the works. The reinforcement shall be paid at contract unit rate. The rate shall also include compensation for the cost of providing, cutting to length, cleaning, spacer blocks, waste incurred by cutting, welding, fixing the reinforcement in position including the provision of wire or other material for supporting and tying the reinforcement in place, bending reinforcement aside temporarily, and straightening, placing and compacting concrete around reinforcementand. Exact length of laps, bending, hooking, and provision and fixing of chairs of atleast 12 mm dia shall be separately measured for payment.

		Formworks As per E1-E13 **Fabric Reinforcement** The fabric reinforcement shall be paid at contract unit rate which shall be also inclusive of compensation for wastage and laps.
11. E. Formworks and Waling		
E1-E13		Form works shall include all temporary or permanent forms required for forming the concrete together with all temporary construction for their support. Form works shall be designed and erected by the Contractor so that concrete can be properly placed and compacted in a manner that the hardened concrete conforms to the required shape, position, and level subject to the specified tolerances and standards of finish. It shall be assembled with adequate nails and /or nuts and bolts. It shall consist of wooden boards, sheet metals, and any other suitable material that prevent loss of grout when the concrete is vibrated. Special care shall be taken to maintain the stability of the form works and the tightness of the joints particularly during concrete vibrating operations. The formworks shall be as specified in the BOQ with adequate ribs for the beam, column and slabs. The Engineer shall approve the material and position of any ties passing through the concrete. The whole or part of the tie shall be capable of being removed such that any remaining part shall be embedded in the concrete by at least the specified thickness for reinforcement cover. Any holes formed by removal of ties shall be filled with concrete or mortar of approved composition. Form works at top shall be provided where the slope of the formed surface exceeds one in four. Before each concrete operation commences, form works shall be cleaned of all rubbish and other foreign particles. Concrete operations shall not commence until the erected form works has been inspected and approved. The Contractor shall give at least 48 hours notice for such inspection. On rejection for any reason, the Engineer shall require another 48 hours to inspect the rectified errors. The inside surface of forms shall be coated with an approved material to prevent the adhesion of concrete. Such material shall be applied strictly in accordance with the manufacturer's instructions and shall not come in contact with the reinforcement or anchors. **Construction of Formwork** Joints in formwork for exposed faces shall, unless otherwise specified, be evenly spaced and horizontal or vertical and shall be continuous in a regular pattern. All joints in formwork shall be water tight. Where reinforcement projects through formwork, the form shall fit closely round the bars. Formwork shall be so designed that it may be easily removed from the work without damage to the faces of the concrete. It shall also incorporate provisions for making minor adjustments in position, if required, to ensure the correct location of concrete faces. Due allowance shall be made in the position of all formwork for movement

		and settlement under the weight of fresh concrete. Surfaces at slopes less than 20° may be formed by screeding. Surfaces at slopes between 20° and 30° shall generally be formed if the Contractor can demonstrate to the satisfaction of the Engineer that such slopes can be screeded with the use of special screed boards to hold the concrete in place during vibration. Horizontal or inclined formwork to the upper surface of concrete shall be adequately secured against uplift due to the pressure of fresh concrete. Formwork shall also be tied down or otherwise secured against floating within the body of the concrete. The internal and external angles on concrete surfaces shall be formed with fillets and chamfers of the sizes shown on the Drawing unless otherwise instructed by the Engineer. Supports for formwork may be bolted to previously placed concrete provided the type of bolt used is acceptable to the Engineer. If metal ties through the concrete are used in conjunction with bolts, the metal left in shall not be close to the face of the concrete by less than 50mm. Formwork shall not be re-used after it has suffered damage which is sufficient to impair the finished surfaces of the concrete. Where circumstances prevent easy access within the form, temporary openings shall be provided through the formwork for cleaning and inspection. Shear keys of the size and shape as indicated on the Drawing shall be provided in all construction joints. Where pre-cast concrete elements are specified for use as permanent formwork, or proposed by the Contractor and agreed by the Engineer, they shall comply with the requirements of formwork as specified in the Specifications in respect of surface finish, strength and rigidity. Such elements shall be set true to line and level within the tolerances prescribed for the appropriate class of finish and fixed so that they cannot move when concrete is placed against them. **Preparation of Formwork** Before any reinforcement is placed into position within formwork, the latter shall be thoroughly cleaned and then dressed with a release agent. The agent shall be either suitable oil incorporating a wetting agent, an emulsion of water suspended in oil or low viscosity oil containing chemical agents. The Contractor shall not use an emulsion of oil suspended in water nor any release agent which causes staining or discolouration of the concrete, air holes on the concrete surface, or retards the set of the concrete or affects the strength of concrete. In order to avoid colour differences on adjacent concret surfaces, only one type of release agent shall be used in any one section of the works. In cases where it is necessary to fix reinforcement before placing formwork, all surface preparation of formwork shall be carried out before it is placed into position. The Contractor shall not allow reinforcement or pre-stressing tendons to be contaminated with formwork release agent.

Before placing concrete all dirt, construction debris and other foreign matter shall be removed completely from within the placing area. Before concrete placing commences, all wedges and other adjusting devices shall be secured against movement during concrete placing and the Contractor shall maintain a watch on the formwork during placing to ensure that no movement occurs. If any movement noticed, the formwork shall be set right immediately.

Removal of Formwork

The Contractor shall give 24 hours notice of his intentions to strike any form works. Forms shall be removed without shock vibrations or other damage to the concrete.

Formwork shall be carefully removed without shock or disturbance to the concrete. No formwork shall be removed until the concrete has gained sufficient strength to withstand any stresses safely to which it may thereby be subjected.

The minimum periods which shall elapse between completion of placing concrete and removal of forms are given in Table and apply to ambient temperatures higher than 10°C. At lower temperatures or if cement other than ordinary Portland are involved, the Engineer may instruct longer periods.

Alternatively, formwork may be removed when the concrete has attained the strength set out in Table provided that the attained strength is determined by making test cubes and curing them under the same conditions as the concrete to which they refer.

Compliance with these requirements shall not relieve the Contractor of his obligation to delay removal of formwork until the removal can be completed without damage to the concrete.

If the Contractor wishes to strip formwork from the underside of arches, beams and slabs before the expiry of the period for supports set out above, it shall be designed so that it can be removed without disturbing the supports. The Contractor shall not remove supports temporarily for the purpose of stripping formwork and subsequently replace them.

As soon as the formwork has been removed, bolt holes in concrete faces other than construction joints which are not required for subsequent operations shall be completely filled with mortar sufficiently dry to prevent any slumping at the face. The morr shall be mixed in the same proportions as the fine aggregate and cement in the surrounding concrete and with the same materials and shall be finished flush with the face of the concrete.

After removal of the formwork, the date of casting of concrete shall be marked on the surface of related concrete by water proof paint/marker for estimation of curing time.

Minimum Time for Form works

Form work	Normal Weather (days)	Cold Weather (days)	Strength to be attained
1.Vertical or near vertical faces of mass concrete	24 hours		0.2 fck
2. Beam sides, walls and	48 hours	1.5:	0.3 fck

		unloaded columns | | | | 3. Sofits of slabs and beams : | | | | Spans up to 3m | 4 days | 7 days | fck Spans over 3m to 6m | 11 days | 17 days | fck **Measurement** Except as stated below, formwork shall be measured in square meter of formwork actually in contact with the finished face of the concrete. No deduction shall be made in the measurement for openings, pipes, ducts and the like, provided that the area of each is less than 0.50 square meters. Unless otherwise stated, if the volume or area of concrete has not been deducted when measuring the concrete, formwork to form box or the void shall not be measured. Formwork required for lean concrete, to form construction joints and shear keys for future concrete and other construction surfaces shall not be measured and the costs shall be included in the rates for other work. Formwork to contraction and expansion joints shall be measured in square meter on one face only. The rates shall include for the costs stated below and for forming recesses for sealant and channels for grout. The measurement of formwork is inclusive of the measurement for formwork finished surface, shoring, staging, scaffolding and other accessories required for erection and removal of the formwork. **Payment** The formwork shall be paid as per the contract unit rate. The rates for formwork shall include the cost of submission of details, transportation and use of all materials for formwork, erection including provision of supports, fillets and chamfers 75 mm and less in width, bolts, ties, fixings, cutting to waste, drilling or notching the formwork for reinforcement where required, working around pipes, ducts, conduits and waterstops, temporary openings, cleaning, dressing, removal of formwork, filling bolt holes and any remedial work including all incidental works required to complete the work as per Specification. The payment for unformed surfaces of concrete shall be deemed included in the contract unit rate of the relevant concrete.
11. F. Roofing Works		
F1 – F6	**CGI sheet**	The corrugated iron sheet shall be of the specified gauge. A 24 B.G. sheet shall weigh 5.4kg/m2. The sheet shall be free from rust and the zinc covering at the time of fixing shall be on perfect condition. Each sheet shall have 10 corrugations 75mm wide and 19mm deep with overall flat width of 800mm, referred to as 24 B.G. 10/3 sheets. Each sheet shall be laid on wooden or steel purling with an end overlap of 150mm minimum or as per drawing and side overlap of two and half corrugations. The sheet shall be joined together with galvanized hook-bolts of L type of 8mm diameter, with bitumen and limpet washers. L hook shall be fixed at 300mm interval along bearer and 600mm along edge. Each bolt shall have “limpet” dome washer in addition to bitumen washer. Wind ties of 40mm x 6mm flat iron shall be fixed at the eaves ends of

		the sheets fixing the same with purling by L hook bolts at 1200mm centre to centre distance. Ridge and hips shall be covered by special ridges and shall be bolted with 300mm lap on either side so as to prevent the rain driving under it. Holes in sheets shall be made on the ground; the sheets shall be placed on trestles and holes punched in the ridge of corrugations from below upward. Unnecessary holes made on the roof shall be rejected in total. **Measurement** Measurement of all the works will be made in m2 of works as specified. **Payment** Payment for work will be made on the basis of contract unit price indicated in the BOQ. The payment will be full and final compensation for all material, labour, and equipment to complete the works as specified.
F7, F8	**Gutters**	Gutter shall be fabricated from plain G.S. Sheets of thickness as specified in the item. Eaves gutters shall be of the shape and section specified in the description of the item. The overall width of the sheet referred to therein shall mean the peripheral width of the gutter including the rounded edges. The longitudinal edges shall be turned back to the extent of 12 mm and beaten to form a rounded edge. The ends of the sheets at junctions of pieces shall be hooked into each other and beaten flush to avoid leakage. Gutter shall be laid with a minimum slope of 1 in 120. Gutter shall be supported on and fixed to M.S. flat iron brackets bent to shape and fixed to the requisite slope. The maximum spacing of brackets shall be 1.20 metres. The gutter shall be fixed to the brackets with 2 Nos. G.I. bolts and nuts 6 mm dia, each fitted with a pair of G.I. and bitumen washers. The connecting bolts shall be above the water line of the gutters. For connection to down take pipes, a proper drop end or funnel shaped connecting piece shall be made out of G.S. sheet of the same thickness as the gutter and riverted to the gutter, the other end tailing into the socket of the rain-water pipe. Wherever necessary stop ends, angles etc., should be provided. The gutters when fixed shall be true to line and slope and shall be leakproof.
F9	**Slate**	A good slate should be hard, tough and durable, of rough texture, ring bell-like when struck, not split when holed or dressed, practically non-absorbent and of a satisfactory colour. Those which feel greasy are generally of inferior quality and may show white patches or marc site (iron pyrites) decay readily, especially if subjected to a smoky atmosphere; patches of lime also adversely affect durability. When left immersed in water to half its height for twelve hours, the water line on the slate should not be more than 3mm above the level of water in the vessel. In slates of poor quality, the water is readily absorbed and rises several inches up the slates; such slates are easily destroyed by frost action (due to the absorbed water freezing and disintegrating the slate). If a dry slate is kept in water which is kept boiling for forty-eight hours, its increase in weight should not

		exceed 0.3 percent, and if a specimen of slate is immersed for ten days in solution of sulphuric acid it should not show any signs of flaking or softening. In the event of the lack of quality control for the slate quarrying, the Engineer In-charge shall reserve the right to reject whole or a portion of the slates brought to the site form previously approved quarry site. Only the selected pieces shall be allowed to remain at site, the rest shall have to be removed immediately as ordered. **Preparation for Laying** The slates shall be hand tool punched 30cm x 45cm and other required sizes and the thickness is maintained to a uniform size of 6mm (approximately). The slates shall be fixed with Copper or CP steel nails. The use of GI nails will not be permitted. **Workmanship:** Same as to the specification of ceramic tile work and as per drawing, and instruction of the engineer, all complete. **Measurement:** It shall be measured in Sqm. of the work.
F10	**Clay Tile**	Roofing tiles are to be clay tile from Harisiddhi Brick Factory or equivalent locally made tile. The clay tile single lap inter-locking at head and side and with ridge tiles etc. to match. They are to be uniform in size, shape and colour and free from twist and other defects, in every respect equal to samples to be deposited with and approved by the Engineer In-charge. Each tile are hooked by 16g GI strap to eaves board (fascia) and in verges too. Before laying tile the gutter should be fixed. Replaced cracked or damaged tiles and clean down and leave roofs watertight on completion. **Measurement** Measurement of works will be made in m2 of plan area of works as specified for the width not less than 250mm. Measurement of works for in vertical plane will be made in linear length of m of works as specified for the width less than 250mm. **Payment** Payment for work will be made on the basis of contract unit price indicated in the BOQ. The payment will be full and final compensation for all material, labour, and equipment to complete the works as specified.
F11	**Clay ridge**	The clay ridge cover fitting to the clay tiles shall be used. These covers shall be laid in 1:4 Cement sand mortar over the tile. **Measurement** Measurement of works will be made in m of linear length of works as specified for the width not less than 250mm. Measurement of works for in vertical plane will be made in linear length of m of works as specified for the width less than 250mm. **Payment** Payment for work will be made on the basis of contract unit price indicated in the BOQ. The payment will be full and final compensation for all material, labour, and equipment to complete the works as specified.

F14,F15	**Fiber Glass**	**Fibre glass reinforced roofing** shall be 4 mm thick of required colour/size, design and drawing as approved. The roof shall have smooth gradual slope curvature for easy drainage of water & shall be factory manufactured as per design & directions of Engineer-in-Charge. **Material** (1) Glass Fibre (chopped strand mat) (2) Unsaturated Polyester Resin The F.R.P. roof laminate shall be water and chemical resistant and shall have very high transit strength to weight ratio and high modulus of elasticity, good textile processing and excellent fiber reinforcement properties. The laminate shall have low coefficient of thermal expansion and a high thermal conductivity and high dielectric constants. The F.R.P. laminate shall be diversionally stable, shall have moisture and corrosion resistance. **Tolerance** Tolerance of + 10 mm in overall size of FRP is permissible. **Finish** The F.R.P. laminate to be finished with polyurathene based or equivalent paint as final coat or gloss or mat followed by clear lacquer coat to get the shine of required shade. **Measurement and Rate** The measurement shall be made in square metre. The rate includes cost of all the materials, labour scaffolding, fittings & fixing upto all heights etc. involved in operations described above.
F19 - F21	**Timber**	All wood work shall be planed neatly and truly finished to the exact dimensions. All joints shall be neat and tight, truly and accurately fitted. Wall plates, purlins and rafter shall be painted with 2 costs of creosote conforming IS 218 1952. All beams shall be bedded on (1:2:4) RCC beds of 10cm x 7.5cm x 4.5cm dimension with a minimum of 15cm bearing or as specified in the drawing. All portion of timber in contact with masonry shall have 6mm gap sides. All beams shall rest on bearing. Measurement of wood work shall be in volumes for the finished work, including fixing, sawing, planning, joining, nails, screws etc. Wooden blocks/joints wherever specified may be measured in number.
11. G. Door and Windows		
G1	**Wooden frames**	The contractor is to clear out and destroy or remove all cut and shavings and other wood waste from all parts of the building and the site generally, as the work progress and at the conclusion of the work. <u>Carpentry:</u> All carpentry shall be executed with workmanship of the best quality. Scantling and boarding shall be accurately sawn and shall be of uniform width and thickness throughout. All carpenter's work shall be left with sawn surface except where particularly specified to be wrought. All carpenter's work shall be accurately set out in strict accordance with the drawings and shall be framed together and securely fixed in best possible manner with properly made joints. All necessary brads, sheet metal screws, etc. shall be provided as directed and approved. <u>Joinery:</u>

		All joints shall be accurately set out on boards to full size for the information and guidance of the artisans before commencing the respective works, with all joints, iron work and other works connected therewith fully delineated. Such setting out must be submitted to the Engineer In-charge and approved before such respective works are commenced. All jointer's work shall be cut out and framed together as soon after the commencement of the building as is practicable, but is not to be wedged up or glued until the building is ready for fixing same. Any portions that warp, wind or develop shakes or other defects within six months after completion of the works shall be removed and new fixed in their place on contractor's own expense. All work shall be properly mortises, tenons, house, shouldered, dovetailed, notched, wedged, pinned, braided, etc., as directed and to the satisfaction of the consultants and all properly glued up with the best quality approved glue. Joints in joinery must be as specified or detailed, and so designed and secured as to resist or compensate for any stresses to which they may be subjected. All nails, springs, etc. are to be punched and puttied. Loose joints are to be made where provision must be made for shrinkage, glued joints where shrinkage need not be considered and where sealed joints are required. Glue for load-bearing joints or where conditions may be damp must be damp must be of the resin type. For non-load-bearing joints or conditions may be guaranteed casein or organic glues may be used. All exposed surfaces of joinery work shall be wrought and all arise "eased-off" by plaining and sand papering to an approved finish suitable to the specified treatment. <u>Dimensions:</u> Joinery shall hold up to the specified sizes and as measure. <u>Fixing Joinery:</u> All beads, fillets and small members shall be fixed with round or oval brads on nails well punched in and stopped. All large members shall be fixed with brass screws, the heads let in and palette to match the grain. Unless otherwise specified, plugs of external work shall be of hardwood; plugs for internal work may be of softwood. Holes for plugging must be made with a proper drilling tool and the holes completely filled with the plugging material. Unless otherwise specified all skirting, window, grounds and backings for same, fillets etc., shall be plugged at intervals not exceeding 600mm. <u>Bedding Joinery:</u> All door and window frames, sills, wooden bars etc., which are fixed to brickwork, concrete by means of grounds, lugs, etc., shall be bedded solid in mortar as previously described and pointed with a recessed joint 6mm deep to the approval of the Engineer In-charge. Plywood, Block boards, Chipboards and MDF board, shall be bonded with synthetic resin of "interior" type and sheet metal screws unless otherwise stated for the doors. Where stated to be "exterior" type, they shall be weatherproof.

		All exposed edges of block board and chipboard shall be lipped with hardwood as described below. Samples of all such materials and their source of manufacture must be approved by the Engineer In-charge before used in the works. **Inspection and Testing** The Engineer In-charge shall be given facilities for inspection of all works in progress whether in workshop or on site. All timber as it arrives on the site and not approved by them must be removed forthwith, failing which the Employer, with the advise of the Engineer In-charge, may arrange for the removal of the rejects and impose of them as they may consider advisable at the contractor's expenses. Notwithstanding approval having been given as above, any timber incorporated in the works found to be in any way defective before the expiry of the maintenance period shall be removed and renewed at the contractor's expense. The contractor is to allow for testing or prototypes of special construction units and the Engineer In-charge shall be at liberty to select any samples they may require for the purpose of testing i.e. for moisture content, or identification of species, strength, etc. Where timbers need to be extended into a wall, they shall be thoroughly "Brush Treated" with a wood preservative approved by the Engineer In-charge, and as much clear air space maintained around the timber where it adjoins the wall as possible. **Measurement** Measurement of works will be made in m³ of works as specified. **Payment** Payment for work will be made on the basis of contract unit price indicated in the BOQ. The payment will be full and final compensation for all material, labour, and equipment to complete the works as specified.
G2	**Panelled shutters**	The window shutters may be fully panelled, fully glazed, partly glazed and partly panelled, battened or Venetian as specified. Styles and panels shall be neatly planed and truly finished to exact dimensions. Styles and rails shall be framed properly and accurately with mortise and tenon joints and fixed with bamboo pins as per drawing. Glue shall be applied at al joints before clamping and fixing with bamboo pins. Panels shall be of one piece without any joints and shall be housed with 12.5mm insertion into rails and styles. Panels shall be of thickness as specified in the drawing. All rails above 100mm in width shall have double tenon. No tenon shall exceed 6mm the thickness of the member. In case of swing door, swing door hung in lace shall not be rebated together. It shall be fitted with vision panels. **Measurement** Measurement of works will be made in m2 of works as specified. **Payment** Payment for work will be made on the basis of contract unit price indicated in the BOQ. The payment will be full and final compensation for all material, labour, and equipment to complete the works as specified.
G3 – G6, G8 – G14	**Glazed, Ply, Teak, GI**	Shutter or frame shall be as described in Panelled doors. Putty: Putty for glazing in wood frames shall be composed of pure

	Sheet and Wiremesh Shutters	linseed oil and whiting powder free from grittiness. Wooden beads All wooden beads shall be from hard wood fitted against the glass. Wooden beads shall be bedded against the rebate and secured by 12.5mm glass nails fixed at 75mm apart. The rebate depth shall be 12.5mm Wooden beads shall not project beyond the rebate. All glass panes shall have edge-clearance, when fitted of 1.5mm all round. Beads shall be painted with approved paint before fixing glass pane. Hinges/ handles/bolts/scrwes: The window shutters shall have minimum of two-piece 100mm steel hinges with steel screws, one aluminium handle and two pieces of 150mm tower bolts of super brand or equivalent with steel screws. The timber louvers shall be 12 mm. thick of the size and fixing as shown in the Drawing. Vertical slats if required shall be provided as per instruction of the Engineer. **Construction Procedure** The window shutters may be fully panelled, fully glazed, partly glazed and partly panelled, battened or Venetian as specified. Styles and panels shall be neatly planed and truly finished to exact dimensions. Styles and rails shall be framed properly and accurately with mortise and tenon joints and fixed with bamboo pins as per drawing. Glue shall be applied at al joints before clamping and fixing with bamboo pins. Panels shall be of one piece without any joints and shall be housed with 12.5mm insertion into rails and styles. Panels shall be of thickness as specified in the drawing. All rails above 100mm in width shall have double tenon. No tenon shall exceed 6mm the thickness of the member. In case of swing door, swing door hung in lace shall not be rebated together. It shall be fitted with vision panels. Rebates of metal frames receiving glass shall be prepared and treated with primer for putty prior to glazing and putty shall be primed ten days after glazing (See Painting). Glass louvers shall have ground edges and be fixed in accordance with the instruction of the louver frame manufacturer. Mirrors shall be 4mm S.G. silvered plate glass or Swan brand with polished edges, and shall be drilled for and fixed with four chromium plated screws with detachable dome heads. On completion remove all broken, scratched or cracked panes and replace with new to the satisfaction of the Engineer In-charge. Clean inside and out with approved cleaner. On no account shall scraping with glass clean windows. **Solid core shutters** Wooden solid core of lightwood with 4mm Teak plywood in both sides glued and lipped with mould salwood of sample approved by project engineer. The tolerances for the overall size are +-3mm +-1mm in thickness. Where described as “External Quality” flushes doors are to be finished with weatherproof plywood as before described and the Engineer In-charge must approve sample doors before the doors are completed.

		The door shutters are polished with clear chapra polish and painted
		with two coats of touch wood polish. The doors shall be sticked with moulding of approved design in the shape as shown in the drawing. The Door shutters shall have minimum of three pieces of 150mm brass hinges with brass screws, one IPSA Mortise lock of heavy duty or equivalent, two pieces of 150mm brass tower bolts of good quality with brass screws, 75 mm doorstopper. **Construction Procedure** The window shutters may be fully panelled, fully glazed, partly glazed and partly panelled, battened or Venetian as specified. Styles and panels shall be neatly planed and truly finished to exact dimensions. Styles and rails shall be framed properly and accurately with mortise and tenon joints and fixed with bamboo pins as per drawing. Glue shall be applied at al joints before clamping and fixing with bamboo pins. Panels shall be of one piece without any joints and shall be housed with 12.5mm insertion into rails and styles. Panels shall be of thickness as specified in the drawing. All rails above 100mm in width shall have double tenon. No tenon shall exceed 6mm the thickness of the member. In case of swing door, swing door hung in lace shall not be rebated together. It shall be fitted with vision panels. **Measurement** Measurement of works will be made in m2 of works as specified. **Payment** Payment for work will be made on the basis of contract unit price indicated in the BOQ. The payment will be full and final compensation for all material, labour, and equipment to complete the works as specified. **Measurement** Measurement of works will be made in m2 of works as specified. **Payment** Payment for work will be made on the basis of contract unit price indicated in the BOQ. The payment will be full and final compensation for all material, labour, and equipment to complete the works as specified. **NB:**These specifications may be adopted for other type of shutters viz plywood, teak, GI sheet flush doors etc as well. For such items replace glass with relevant material as specified.
G7	**MS roding in window frames**	As specified and instructed by the Engineer-in-Charge and detailed working drawings, if any.

	Carved wooden door and windows	For shutter, the thickness of 38mm salwood panel shall be used for carving and decorative works, unless otherwise mentioned. The section size of door frame for decorative door shall be 75mm x 125mm section or 100mmx100mm or equivalent to this section or as approved by the engineer **Construction Procedure** The carving of the doors and windows should be refined aesthetically with reflection carving craftsmanship as approved by Architect For the main decorative carved door shutter, the shutter shall be fitted 1 nos. of 300mm brass aldrop, 2 nos. 200mm brass door handle, 4 nos. of 250mm tower bolt, 6 nos. 25x25x125mm brass hinges, nails,
		screws, with at least three coats of chapra polish, or as per drawing and instruction of engineer, all complete. **Measurement** Measurement of works will be made in m2 of works as specified. The measurement of door frames inclusive of carved wooden door shutters shall be done only once in Sqm. The quantity shall be derived by multiplying full length and full breadth of the door frames inclusive of door shutter. The rate shall include both salwood door frame and door shutter works with paints in square meter of length and breadth of door size. **Payment** Payment for work will be made on the basis of contract unit price indicated in the BOQ. The payment will be full and final compensation for all material, labour, and equipment to complete the works as specified.
G15, G16	**Mica lamination works**	As specified and instructed by the Engineer-in-Charge and detailed working drawings, if any.

		These shall be fabricated from 15 micron natural or colour anodized Aluminium profiles conforming to IS: 733-1983. The glazing glass shall be clear IAG float glass or equivalent without any distortion. The window shall be made out of extruded aluminium section (Al. Mg. Si.) and shall conform to IS – 63400, AA-6063 unless otherwise directed. Aluminium sections shall be anodized and the anodic film shall be 12-15 microns. The colours shall be as directed. The 2-3 tracks on outer frame of standard size otherwise directed shall be fixed in the position by using heavy duty plastic grips with necessary plugs and fillers. All the sliding shutters shall be provided with two ball bearing rollers and ratting pieces/guides one each at the top and bottom, weather strips all around. Openable window shall be double weather stripped, one strip shall be provided in outer frame and outer shall be in the shutter frame. The hinges or stay hinges of openable window shall be strong. Pin of the hinges shall be of non-corroding materials, preferably nylon/steel. All the joints shall be mechanically fixed. All the window shutter shall be provided with special locking arrangement. Glass shall be fixed in the shutter by means of rubber gaskets. **Construction Procedures** The sliding window frames are of two-track design and the shutters are to be jointed by special cleats for extra strength. Rollers mounted on ball bearings are to be fitted to obtain smooth operation. The sliding shutters shall have provisions for grooves for weather strips to exclude wind, water or dust ingress. The shutters are glazed with 4mm thick approved quality and clear transparent glass using gaskets of ethylene- propylene or PVC (EPDM/ PVC). The doorframe shall be made of aluminium extrusion as per design. The ventilator frames with fixed glass shall be of same dimension as the sliding two-track frame. The frames and shutters are to be fabricated by using the crimping method of corner jointing. Corners of frames are to be miter cut on high speed TCT saw machines to give burr free corners. Sturdy

		corner cleats should hold the frames with only a hairline corner joint visible and the frames should be square/ rectangular and free from distortions. The frames shall be firmly secured to the walls in line and level. Only aluminium screws shall be used for joining and no welding will be allowed. The joint between the frame and the plaster on walls, sill and lintel beam shall be filled with silicon sealant. The aluminium windows/ ventilators/ doors shall be free from scratches and other visible defects. The frames are fixed to the wall with plastic grips and steel screws of suitable colour. **Standard Sizes, Tolerances and Designations** The overall sizes of aluminium doors, windows and ventilators are derived after allowing 1.25 mm clearances on all the four sides for the purpose of fitting the doors, windows and ventilators into modular openings. **Tolerances** The sizes for doors, windows and ventilators frames shall not vary by more than ±1.5 mm. **Glass Panes** Glass panes shall weigh at least 7.5 kg/m2 and shall be free from flaws, specks or bubbles. All panes shall have properly squared corners and straight edges. **Stainless Steel Friction Stay** The stainless steel friction stays of make approved by the Engineer-in-Charge shall be used. **Lockable Handles** The lockable handle shall be of make approved by the Engineer-in-Charge and of required colour to match the colour of powder coated /anodized aluminium window sections. **Tubular Handle** The tubular handle bar shall be aluminium polyester powder coated minimum 50 micron to the required colour/anodized AC 15. Outer dia of tube shall be 32 mm, tube thickness 3.0 mm and centre to centre length 2115 mm + 5 mm. **Measurement** Measurement of works will be made in m2 of works as specified. **Rate** Rate shall include full and final compensation for all material, labour, and equipment to complete the works as specified.
G21	**UPVC doors and windows**	Polyvinyl chloride Resin suspension grade is the basic raw material for forming PVC compound. PVC resin then is mixed with chemicals like Calcium, Stearate, Hydrocarbon Wax, Titanium Dioxide, Calcium Carbonate, and Acrylic processing aids. Further, additives like impact modifiers, pigments, epoxy plasticizer, UV stabilizer, lubricants, chemical blowing agent etc. are added. The purpose of adding the chemicals and additives is to impart cellular structure, strength, surface finish, colour and resistance to fading by light rays. These chemicals are mixed in the desired proportion and shall be used in the formulation of PVC material and for free and smooth extrusion of PVC profiles. The Upvc work as scheduled and detailed shall be fabricated as per the Drawings. Fabricated Upvc work covered by this specification

		shall be supplied and installed by the well-known local Upvc fabricators or manufacturer as approved by the Engineer. Before placing any orders the Contractor shall state the name of the window manufacturer he has selected from the list of approved manufacturers. The nominated manufacturer shall not be changed without prior approval of the Engineer. **Manufacture** Upvc work shall be fabricated in accordance with the standard Manufacturer manual and as per the Drawings showing jointing details, hardware and extrusion profiles. It will be the Upvc fabricator's responsibility to ensure that all fabricated Upvc work is carried out in accordance with the Drawings. The frame and the rebate shall be a monolithic unit. All the members shall be free of stains and any damage. If any damage or defects during delivery or after fitting in position are found, the defects shall be rectified immediately or replaced at the Contractor's expense. The Contractor shall attach all necessary product and quality specification along with the quotation. All the frames and shutters shall be of the same color. **The fly mesh net:** if applicable, shall be stainless steel jali (fly mesh net) or as approved by the A/E. The jali shall be fitted neatly and cleanly in the shutter and shall be tight and plain throughout the shutter. Any damage during fitting or delivery will not be accepted. The Contractor shall replace the fly mesh immediately at no additional cost if the fly mesh is found to be damaged after fitting and fixing in position. The contractor shall verify the exact dimension at site before fabrication. In the event of any changes, the Contractor shall be timely informed by the Upvc contractor (in the event of third party supply) at the time of masonry works. Any demolition and/or re-masonry work due to the lack of co-ordination between the Upvc contractor and the civil contractor will be the responsibility of the Contractor and it is incumbent on the Contractor to co-ordinate, as appropriate, with the UPVC. **Workshop Drawings** The contractor shall arrange for the preparation of complete workshop drawings of all fabricated Upvc work and shall submit same to the Engineer for approval. **Flashing** All flashings required to be built in as the work proceeds shall be supplied by the Contractor and built in by the trade concerned. All other flashings as detailed on the Drawings shall be supplied and fixed in position by the fabricator. **Hardware Fittings** Hinges, handles, knobs, locks, ball catchers, bolts, door stoppers, door closers, door spring adjustable shelf fittings and other hardware fittings for doors and windows shall be of the best quality and of the specified make and approved by the Engineer. The size number, make etc. shall be as per the hardware schedules as shown on drawings or BOQ. **Measurements**

		It shall be done in square meter of the area done. **Rate** Rate shall be for all labour and materials, accessories, all complete.
11. H. Flooring Works		
H1	**Concrete flooring**	**Materials:** Cement: Portland cement as per specification under "Concrete Work" Aggregate of 12mm nominal gauge shall be properly gauged. Sieving may be insisted upon in which case the contractor shall provide/ supply necessary sieves and labour at his own cost. Sand shall be clean inner bed. Grain distribution shall be same as described under 'Plastering'. **Proportion:** The concrete shall be either 1:2:4 mix or 1:4:8 mix or as specified in the drawing. All mix shall be batched by volume except cement, which shall be proportioned by weight and as specified. **Mixing:** Mixing shall be done on a watertight platform. Material shall be dry mixed after accurately gauging different materials in wooden boxes. The dry mixture shall be turned over thrice (at least) till the colour is uniform and then twice while wet. Water shall be added gradually and no more than necessary to sufficiently wet the materials. Only that much concrete shall be mixed which can be used within half an hour. Each stock of dry mix shall not be larger than consuming one bag of cement. In case of machine mixing IS. Code shall be strictly followed and the mixing done under the supervision of the site In-charge. **Preparation of Sub-grade** The sub-grade shall be cleared of all loose earth, rubbish, and other foreign matter. If necessary the sub-grade shall be cleaned with wire brushes. Cleaned sub-grade shall then be wetted with water thoroughly, but no water pool shall be allowed. Necessary slope shall be given in the sub-grade itself. If the sub-grade is of lean concrete the flooring shall be commenced within 48 hours. **Placing** Concrete shall be laid in horizontal layers and gently rammed. **Finishing** It shall be compacted first with wood float. The blows shall be fairly heavy but as consolidation takes place, light rapid strokes shall be given. Beating shall continue till all hollows in concrete are filled with mortar paste. Then the surface shall be trawled till the moisture disappears. The surface shall be checked with straight edge. The surface must be uniform in colour. Immediately after trawling, well-mixed neat cement slurry mixed integrally with hardening liquid 2 litres. to 50kg of cement shall be sprinkled in a uniform layer at the rate of 2.2 kg. per sq.m. The cement slurry shall be trawled smooth with a steel float several times till approved finish is achieved. The surface shall be without the float marks or air holes. Sample of workmanship shall be got to approved prior to work. **Curing** Curing shall not be commenced until the top layer has hardened. Hardened concrete shall be kept wet for 15 days. Covering with empty cement gunnies shall be avoided, as the colour is likely to be

		bleached with the remnants of cement matter from the bags **Measurement** It shall be measured in square meter for specified thickness measured from wall to wall exclusive of any finishing or as per instructions of Engineer. Unless otherwise stated in the schedule of quantities, nothing extra shall be admissible for small areas and corners and work in any shape. No deductions shall however, be made for protruding or independent columns occurring in the floors, door frames embedded in floor or any other part out when the area does not exceed 0.1 m2 for each. However nothing extra shall be allowed for the cutting involved at such places.
H2 – H5	**Mosaic/ Terrazzo Tile Flooring**	Marble Chips**:** Marble chips shall be of 3 mm gauge having maximum size 3mm and minimum size of 1.5 mm and shall be of good quality. The color shall be as per the instruction of engineer or drawings. Sample of marble stone to be used shall be submitted to the Project manager and his approval should be taken before the bulk purchase. All the marble chips supplied shall conform to the approved sample in all respect. **Proportion and Mixing** **Base course** For cement concrete base course, All mix (as per specified proportion) shall be batched by volume except cement, which shall be proportioned by weight and as specified. Mixing shall be done on a watertight platform. Material shall be dry mixed after accurately gauging different materials in wooden boxes. The dry mixture shall be turned over thrice (at least) till the color is uniform and then twice while wet. Water shall be added gradually and no more than necessary to sufficiently wet the materials. Only that much concrete shall be mixed which can be used within half an hour. Each stock of dry mix shall not be larger than consuming one bag of cement. In case of machine mixing IS. Code shall be strictly followed and the mixing done under the supervision of the site In-charge. For cement sand Base Course: 1 part cement; 2 parts sand and mixing shall be done as per specification for mortar mixing of brick masonry work **Top course:** The marble chips and cement shall be mixed by measuring with boxes to have the required proportion firsed dry mixed, and then thoroughly mixed by adding water gradually to have a uniform plastic mix. Within two hours of laying of the bottom layer of cement concrete, the upper layer of marble chips and cement shall be laid, and the surface tamped lightly and finished perfectly level with straight edge float and trowel. After about 2 hours of laying, the surface shall be covered with wet bags and kept wet and left undisturbed for two days. The surface shall then be cut or ground by rubbing with sand stone blocks and all the cement in the surface removed. A neat cement wash shall then be given in the surface and left undisturbed for six days and then the surface shall be ground (or rubbed) with carborundum stones of different grades starting with coarse one and

		successively with finer ones, and the rubbing continued until the entire surface shows a uniform granular appearance. The surface should be kept wet during all these days. After final rubbing the surface shall be thoroughly cleaned by washing with soap water and then with clean water. **Laying** The base shall be made rough and watered and given a cement wash and then the mortar shall be laid in 20 mm. thick layers as per instruction of Engineer. After laying mortar, it should be levelled with wooden floats. Proper slope for draining wash water shall be provided as per instruction of the Engineer. And over this, marble stone should be laid; the joints should not be more than 3 mm. The joints should be painted with white cement slurry. **Curing** After about two hours of laying, the surface shall be covered with wet bags and kept wet and left undisturbed for two days. **Finish** Finally, when the surface is absolutely dry, oxalic acid powder shall be rubbed well on the surface with grinding machine with water, and this operation shall be repeated until the surface becomes perfectly smooth and glossy. The surface shall be rubbed with wax to give a glazing surface. White cement or color cement shall be used in joint to have the required color as per specified or as per instruction of Engineer. Care shall be taken that the floor is not left slippery and that ordinary wax is not used under any circumstances If required by the Engineer, the grinding and polishing shall be done by grinding machine in 3 operations, first grinding with machine fitted with coarse Carborundum stone, second grinding with medium grade Carborundum stone and final grinding with fine grade Carborundum stone. **Measurement** Measurement shall be in square meter of exact length and breadth (length and height in dado) of the floor. Rate Rate shall include materials, mixing, laying, curing, finishing, grinding, polishing and labor etc., all complete.
H6, H25, H29, H39	**Tiling**	**Tiles:** The tile material for Glazed/Non-glazed Vitrified Porcelain (Granite Viglacera-Vietnam, Portebello- Brazil or equivalent make) / Glazed/Non-glazed Ceramic tiles (Somany, Kajaria or equivalent make), shall confirm to IS:777 (respective IS standards) or Equivalent approved by the Engineer The tiles shall be of approved colour, size and shape or as shown in the drawings. and shall be laid to the pattern approved by the Engineer. The tiles shall be of uniform colour, true to size and shape and free from cracks, twists, uneven edges, crazing and other defects. The size and thickness of the tiles shall be as specified. The contractor shall submit samples of tile for selection and approval by the Engineer In-charge and all tiles delivered to the site shall conform to the approved samples with regard to size, quality, texture and colour. **Mixing:** Mixing shall be done as per specification for mortar mixing of brick

		masonry work **Preparation of Surface and installation** Wall surfaces shall be brushed cleaned and wetted. Prior to installing any tile, the Contractor shall inspect surface and conditions in areas to receive tile work and shall notify the Engineer of any serious defects or conditions that will interfere with or prevent a satisfactory tile installation and shall coordinate with other traders of work. Approximately 12 mm thick level and plumb, scratch coat of cement mortar 1:4 or as specified by site engineer shall be applied. The scratch coat shall be moist cured for at least 24 hours before application of floating coat. Before applying floating coat the scratch coat shall be thoroughly wetted. The floating coat, plastic mix of neat cement of approximately 3 mm thickness shall be applied even with screeds to true plane. Floating coat shall be applied over areas no larger than can be covered with tile while the mortar is still plastic (half set). Glazed tile shall be soaked, completely immersed in clean water at least 30 minutes and drained. Individual tile that exhibits drying along edges shall be allowed to remain on the backs of tile at the time of setting. Tiles shall be installed by applying a skin coat of a plastic mix of neat cement to backs of tile and firmly pressing tile into the floating coat to true plane and position. White cement shall be used for the skin coat where white joints are required. During the process of setting tiles, continuous horizontal and vertical cuts every 40cm to 60 cm shall be made through the floating coat while plastic, using the point of a trowel turned edge wise, Care shall be taken to prevent cutting into the scratch coat. Where full size tile cannot be laid, it shall be cut (sawn) to required size and edges rubbed smooth to ensure a true and straight joint. All tile work finishing shall be adequately protected from damage during the progress of construction and any damage shall be repaired to the satisfaction of the Engineer at the Contractor's expense. **Joints in Tile Work** Joints in tile work shall be accurately aligned with horizontal joints level and vertical joints plumb. Joints shall be maintained uniformly wide by aligning spacer lugs on tile edges if tiles are so manufactured or by use of wetted strings. **Tile Layout** Tiles shall be laid out in such a way that no tile less than half size occurs. Where tile must be cut at edges or penetrated the cut edges shall be carefully filed and neatly ground. Chipped, cracked or broken tile shall not be used and all defective work shall be replaced and repaired to the satisfaction of the Engineer at the Contractor's expense. **Grouting the Tile Joints** After tiles have been set firm and strings removed, the tiles shall be dampened and joints grouted full with a plastic mix of neat cement by trowel, brush or finger application. Unless otherwise directed, grout shall be white cement. During grouting all excess grout shall be

		cleaned off the tile surface with damp cloth sponges The finished floor surface shall be true to required levels. All tile work finishing shall be adequately protected from damage during the progress of construction till completion and any damage shall be repaired to the satisfaction of the Engineer at the Contractor's expense. Upon completion prior to final inspection and acceptance, the Contractor shall clean all tile work. Acids or agents liable to damage the work shall be avoided. If tile surface show mass scratches, crack or other imperfections, which cannot be removed by cleaning; the Contractor shall remove the defective material and replace with new material at no additional expense. Sample of workmanship and tile grout proposed (silicone) shall be approved prior to execution of work. **Measurement** The measurement shall be in square meters of the work done including the setting mortar. The rate shall be for the material and labour, all complete.
H7 – H10	**Flag Stone paving**	Flag stone of specified thickness shall be of uniform colour free from cracks and other defects. Each of the four edges shall be trimmed to four straight lines with right angle to other edge unless otherwise stated. The size of the flagstone shall be of uniform in width of 45cm and the variable length not less than 30cm. Thickness of the slab shall not exceed more than 50mm nor be less than 30mm. **Laying** Stone slab of specified thickness shall be laid on sand bed or 1:4 cement sand bed as specified by engineer. Joints shall be kept as thin as possible and shall not exceed 6mm and all the joints are pointed with 1:1 Cement sand mortar unless specified otherwise by engineer. Laying shall start from one side in the slope as indicated in drawing or instruction. Under no circumstances shall the contractor insert small stone chips underneath the slab to raise its level to desired level. After the slabs of stone are laid, the mortar in the joints shall be raked to a depth of 12.5mm to 20mm. Joints flush pointed with 1:1 cement sand mortar. Special care shall be taken to protect the floor from walking over it before it is completely dry or in any event not earlier than 3 days. Sample of floor stone shall be produced before site In-charge for approval and the contractor shall procure only those stone slabs that clearly and definitely confirm with the approved sample. At any case, the procured slabs shall be exhibited before using as floor slab. **Measurement** It shall be measured in square meter for specified thickness.
H11	**Telia brick pavement**	Telia tiles are to be uniform in size, shape and colour and free from twist and other defects, in every respect equal to samples to be deposited with and approved by the Engineer In-charge. **Measurement** Measurement of works will be made in m2 of plan area of works. **Payment** Payment for work will be made on the basis of contract unit price indicated in the BOQ. The payment will be full and final compensation for all material, labour, and equipment to complete the works as specified.

H12, H15a	**Flat Brick Soling**	The flat brick soling shall be made in foundation and floor. The brick laying/ soling shall be done over the 5cm sand filling in line and level Each brick shall be laid separately and tamped firmly in place in the sand bed. Joints between bricks shall be filled with dry sand. On completion the surface shall be true to line and level with no part deviating from true line and level by more than 20mm. No mud on sand filling shall be allowed when level is not maintained in excavation.
H13, H15b, H17	**Brick On Edge Soling**	The Brick on Edge brick soling shall be made in foundation and floor. The brick laying/ soling shall be done over the 5cm sand filling in line and level Each brick shall be laid separately and tamped firmly in place in the sand bed. Joints between bricks shall be filled with dry sand. On completion the surface shall be true to line and level with no part deviating from true line and level by more than 20mm. No mud on sand filling shall be allowed when level is not maintained in excavation.
H14, H38	**Parqueting**	Providing and laying 12mm thick **wooden parquet** flooring of natural wild shishum, including Chapra polishing to smooth finished floor surfaces as per drawing, specification and direction of engineer, all complete, in m². **Material** The wooden parquet flooring shall be of natural wild shishum in standard size (e.g. minimum size of 70mm x 280mm x 12mm or 50mm x 300mm x 12mm parquet tile) or equivalent as approved by the Engineer. The moisture content shall be not more than 8%. **Laying** (These wooden tiles are laid over the dust and grease free cement surface floor. The floor is adequately spread with adhesive and tiles are laid. The joints of one tile to other tile should +-. 05mm.) The wild shishum wooden parquet flooring shall be provided on neatly finished and levelled IPS flooring. The tiles shall be laid over standard base of wood, using parquet adhesive in pattern approved by the Engineer. The smoothly finished surface shall be sandpapered, and finely finished with chapra polish as approved.Over these surface two coats of transparent lacquer paints are applied. The Contractor shall submit sample of material for approval of the Engineer. The Contractor shall also erect a sample panel of 900mm x 900mm or larger size for his approval of the finished workmanship prior to commencement of the work. Measurement It shall be measured from wall to wall of actual work done in square meters, which shall include skirting works also. Rate Rate shall include all material, laying, finishing, skirting and labour etc., all complete.
H16, H18	**Stone soling**	Refer to dry stone masonry
H19	**Sand filling**	Sand filling in floor shall be done with proper ramming in 23mm layers, after sprinkling with water and consolidating. Sand shall be free from rubbish, organic materials etc. Particular care shall be

		exercised not to dump sand in space between foundation trench and inside face of the masonry. Measurement shall be in cu.m. of consolidated actual Work.
	Brickbat Filling	Brickbat boulders shall be hard, tough, sound and durable. No brickbat shall be more than 5cm. Boulders shall be laid in their natural bed. Smaller size boulders/pebbles shall be used to fill up gaps between boulders in order to form uniform well-knitted floor structure. Measurement shall be in cubic meter of actual length, breadth and depth.
H20	**Neat cement punning**	Refer to plaster works, exclude sand.
H21	**Wooden planking**	The seasoned and aldrin treated Timber Planks of finished size of 450mm x65mm x15mm of specified hardwood or as directed by the consultant shall be used and laid in approved type of pattern over levelled cement punned surfaces and fixed to the floor with Dendrite glue or water repellent Glue and each tile is screwed to ground with two nos. sheet metal screws and grip. At the edges, of floor the plank should have minimum of 8mm gap for the expansion and contraction. The top surface shall be finished in perfect line and level. The planks shall be painted with chapra paints as per the specifications and finished with 2 coats of Polyurethane paints as wearing coat. The texture of the floors shall be in mat or as instructed by the Project In-charge.
H22, H23	**Concrete interlocking tiles**	The cement concrete interlocking tiles of approved shape size and color shall be provided in cement sand mortar. These shall be either pre-cast concrete blocks or cast-in-situ concrete. Cement sand mortar used for bedding and joint shall be in 1:4 ratio. **Laying** The tiles shall be laid on either concrete or compacted sand-gravel as indicated in the Drawing. In the case of cement sand base , it shall be 1 part cement; 4 parts sand and mixing shall be done as per specification for mortar mixing of brick masonry work laid to the dimensions, lines and levels shown in the Drawing and well compacted by ramming or other means. Before laying the foundation of lean concrete, the base shall be leveled and slightly watered to make it damp. In the case of sand gravel it shall consist of a material approved by the Engineer. The tiles shall then be laid out and bedded on 12 mm thick cement sand mortar of 1:4 ratios. The gaps between the block/slabs shall not be more than 12 mm and shall be filled with 1:4 cement sand mortar. **Tests and Standard of Acceptance** Concrete shall be tested in accordance with specification for concrete and shall meet the specified criteria. All tiles shall be laid true to the lines and levels shown on the Drawing or as instructed by the Engineer. **Measurement** The work shall be measured in square meter of the area. Concrete and/or sand-gravel foundation shall be measured in cubic meters. Excavation for foundation shall not be measured. It is deemed included in the measurement of the tiles.

		Payment The tiles measured as above shall be paid at the contract unit rate which shall be the full and the final compensation to the Contractor. Concrete and/or sand-gravel foundation shall be paid for separately, as provided under respective Sections of these Specifications.
H24	**Plaster of Paris works**	The plaster of Paris shall be of semi – hydrate variety calcium sulphate. Its fineness shall be such that when sieved through a sieve of IS sieve designation 3.35mm for 5 minutes, after drying the residue left on it shall be not more than 1% by weight. It shall not be too quick setting. Initial setting time shall not be less than 13 minutes. **Preparation of Surface** Projecting burrs of mortar formed during existing cement plaster shall be removed. The surface shall be scrubbed clean with wire brushes. In addition the plastered surface shall be pock marked with pointed tool, at spacing of not more than 4cm centers and depth of pocks to be approx. 3mm deep. This is to ensure a proper key for the plaster. The surface shall be cleaned of oil and grease marks etc. **Application** The material shall be mixed with water to a workable consistency. Plaster of Paris shall be applied directly on the wall plasters in suitable size panels and finished t a smooth surface by a steel trowels. The plaster shall be applied in such a manner that it fully fills the gaps the thickness over the plastered surface is as specified in the description of the item. The finished surface shall be smooth and true to plane, slopes or curves as required. **Measurement** Measurement shall be in square meter of area of application. Rate shall include materials, mixing, laying, curing, finishing and labour etc. all complete.
H25	**Clay tiling**	Refer to glazed tiling works
H26	**Granite flooring**	**Materials** Cement: Portland cement (white as well) as per specification under "Concrete Work" Sand: As per specification under "Concrete Work" Granite: Granite shall be of good quality, 16 ± 2mm thick, having smooth, hard polished surface, regular in shape, size and of uniform thickness, of good appearance, and of sharp and square edges. It shall be free from cracks and other defects. The color and size shall be as per the instruction of the engineer and drawing. Sample of granite stone to be used shall be submitted to the engineer and his approval should be taken before the bulk purchase. All the granite stone supplied shall conform to the approved sample in all respect. **Proportion** Base Course: 1 part cement; 2 parts sand and mixing shall be done as per specification for mortar mixing of brick masonry work **Dressing** Each granite stone slab shall be machine cut to required size and shape as specified in the drawings. All angles and edges of the granite slabs shall be true and square and free from chippings and the

		surface shall be true and plane. The thickness of the stone shall be as specified in the drawings. No tolerance shall be allowed for thickness. The granite slabs shall be mirror polished. All granite stones shall be brought pre-polished to the site. The contractor shall prepare samples and obtain approval of the Engineers before proceeding with the work. The contractor shall ensure that no chisel marks are visible on the surface of the stone before fixing. Stones with chisel marks or broken edges shall be rejected. **Laying** The base shall be made rough and watered and given a cement wash and then the mortar shall be laid in 19-20 mm. thick layers as per instruction of Engineer. After laying mortar, it should be leveled with wooden floats. Proper slope for draining wash water shall be provided as per instruction of the Engineer. And over this, granite stone should be laid; the joints should not be more than 1.5 mm. The joints should be painted with approved colored cement slurry. **Curing** After about 2 hours of laying, the surface shall be covered with wet bags and kept wet and left undisturbed for 2 days. **Finish** Finally, when the surface is absolutely dry, the surface shall be rubbed with wax to give a glazing surface, as per instruction of Engineer. Care shall be taken that the floor is not left slippery and that ordinary wax is not used under any circumstances **Measurement** Measurement shall be in square meter of exact length and breadth of the floor. Rate shall include materials, mixing, laying, curing, finishing and labor etc. all complete.
H27	**Anti-slip Precast Cement Tile**	Providing and laying of pre-cast Anti-slip (300X 300) cement tile of approved pattern in Ramp and other specified area in cement mortar 1:4 (1 Cement : 4 Sand) and pointing the joints with cement mortar of same color as of cement tile all complete. The Pre-cast cement tile shall conform to relevant standard of NS and IS of latest revision. The surface shall be cleaned of all dust particles and impurities that affect cement mortar. **Proportion** Base Course: 1 part cement; 4 parts sand and mixing shall be done as per specification for mortar mixing of brick masonry work **Installation** The tile shall be laid in cement mortar having 20mm thickness minimum. All the joints shall be finished as per the drawing and instruction of the Engineer. A sample of workmanship shall be approved prior to execution of work. **Measurement:** It shall be measured in square meter of the area covered including materials and labor complete.
H31	**Acid or alkali resistant tiles**	The tiles shall be of vitreous ware and free from deleterious substances. The iron oxide content allowable in the raw material shall not exceed two percent. The tiles shall be vitrified at the temperature of 11000C and above and shall be kept unglazed. The finished, tile, when fractured shall appear fine grained in texture, dense and homogenous. The tiles shall be sound, true to shape, flat and free

		from flows and manufacturing defects affecting their utility. The tiles shall be of required colour. **Dimensions and Tolerances** Ceramic unglazed vitreous acid-resistant tiles shall be made in three sizes namely 98.5 X 98.5 mm, 148.5 X 148.5 mm and 198.5 X 198.5 mm. They shall be available in the following thickness: 25, 20 and 15 mm. The depth of the grooves on the underside of the tile shall not exceed 3 mm. Tolerance on length, breadth and thickness of tiles shall be + 2 percent. **Shape** The tiles shall be square shaped. Half tiles rectangular in shape shall also be available. Half tiles for use with full tiles shall have dimensions which shall be such as to make two half tiles, when joined together, match with the dimension of full tile. The shape of tiles other than square shall be as agreed to between the purchaser and the manufacturer. **Marking** Tiles shall be legibly marked on the back with the name of the manufacturer or his trade mark, manufacturer's batch number and year of manufacture. Each tile may also be marked with the standard certification mark. **Preparation of Surface and Laying** The cement used to be acid and or alkali resistant cement and cement mortar to be used to be acid and or Alkali resistant mortar. Thickness of bedding of mortar for flooring to be 10 mm or specified on the item and for dado/skirting to be 12 mm or specified on item. **Rate** The rate for flooring shall include the cost of all materials and labour involved in all the operations described above.
H32	**Vinyl sheet flooring**	Providing and laying plain, textured, coloured vinyl Tiles with color and patterns as indicated or as approved by site engineer/ Architect, including compatible adhesive over previously prepared substrate, with polyurethane surface treatment as per drawing and design requirement. **Materials** Vinyl Sheet : As specified in BOQ.or as per site engineers approval. Contractor shall submit manufacturer's technical data for flooring and accessory. Welding Thread: Vinyl thread or rod shall be used as produced by the manufacturer of sheet vinyl flooring and intended for heat sealing of joints. Color shall match field of sheet vinyl floor covering unless otherwise specified by engineer Adhesive: Only Manufacturer approved adhesive as compatible to the tiles, as approved by site engineer/architect shall be used. Manufacturer approved adhesives shall be submitted to site engineer/ Architect for approval. **Preparation of Surface and Installation** Subfloor surface shall be solid, dry, smooth and free from cracks,

		holes, ridges, or coatings preventing adhesive bond and other defects impairing performance or appearance. Slab substrates shall be dry and free of curing compounds, sealers, hardeners and other materials that may interfere with adhesive bond. Coatings from subfloor surfaces that would prevent adhesive bond, including curing compounds incompatible with flooring adhesives, paints, oils, waxes and sealers shall be removed.Adhesion and dryness characteristics shall be determined by performing bond and moisture tests recommended by flooring manufacturer. Cementitious leveling and patching compounds as recommended by site Engineer shall be used for filling small cracks, holes and depressions and leveling subfloors. This contractor shall be responsible for leveling new or existing floors whose surface varies up to 5/16". Site engineer shall be notified in writing where substrate varies more than above before proceeding with the work. Gypsum based leveling compounds shall not be accepted. Flooring and accessories shall be installed only after other finishing operations, including painting, have been completed. Flooring shall not be installed over concrete slabs until the latter have been cured and are sufficiently dry to achieve bond with adhesive. Any unsatisfactory work shall be informed to site engineer. Flooring work shall not be commenced until the subfloor surfaces are satisfactory and approved by site engineer. Installation shall be carried out as per manufacturer's instruction after approval from site engineersThe finished floor surface shall be true to required levels. All flooring work finishing shall be adequately protected from damage during the progress of construction and any damage shall be repaired to the satisfaction of the Engineer at the Contractor's expense. Upon completion prior to final inspection and acceptance, the Contractor shall clean all work. Agents liable to damage the work shall be avoided. If surface show mass scratches, crack or other imperfections, which cannot be removed by cleaning; the Contractor shall remove the defective material and replace with new material at no additional expense. Sample of workmanship and tile grout proposed (silicone) shall be approved prior to execution of work.
H33 – H37	**Marble flooring**	Marble stone: Marble shall be of good quality having smooth, hard surface, regular in shape, size and of uniform thickness, of good appearance, and of sharp and square edges. It shall be free from cracks and other defects. Marble stone of uniform size with more than 45cm and the minimum length of 1200mm to fit in the counter and floor, may be from Godavari Marble factory (polished of minimum size 600mmx600mm) or Rajasthani (Indian) Marble equivalent conforming to IS 1130 – latest Revision or BS specification or as approved by the engineer. No small marble will be allowed except in the thin wall or skirting or the edges or unless specified by engineer. The marble must be backed with the nylon grip net. . The marble shall be of minimum thickness of 20mm. The colour shall be as per the instruction of engineer or drawings. Sample of marble stone to be used shall be submitted to the Project manager and his approval should be taken before the bulk purchase. All the marble stone supplied shall conform to the approved sample in all respect. **Proportion**

		Base Course: 1 part cement; 2 parts sand and mixing shall be done as per specification for mortar mixing of brick masonry work **Dressing** Each marble stone slab shall be machine cut to required size and shape as specified in the drawing and as instructed by engineer. All angles and edges of the marble slabs shall be true and square and free from chippings and the surface shall be true and plane. The thickness of the stone shall be as specified in the drawing. No tolerance shall be allowed for thickness. For flooring, the marble slabs shall be machine cut with good finish at edges and corners. The contractor shall ensure that no chisel marks are visible on the surface of the stone before fixing. Marbles with chisel marks or broken edges shall be rejected. **Laying** The base shall be made rough and watered and given a cement wash and then the mortar shall be laid in 20 mm. thick layers as per instruction of Engineer. After laying mortar, it should be levelled with wooden floats. Proper slope for draining wash water shall be provided as per instruction of the Engineer. And over this, marble stone should be laid; the joints should not be more than 3 mm. The joints should be painted with white cement slurry. **Curing** After about two hours of laying, the surface shall be covered with wet bags and kept wet and left undisturbed for two days. **Finish** Finally, when the surface is absolutely dry, oxalic acid powder shall be rubbed well on the surface with grinding machine with water, and this operation shall be repeated until the surface becomes perfectly smooth and glossy. The surface shall be rubbed with wax to give a glazing surface. White cement or colour cement shall be used in joint to have the required colour as per specified or as per instruction of Engineer. Care shall be taken that the floor is not left slippery and that ordinary wax is not used under any circumstances If required by the Engineer, the grinding and polishing shall be done by grinding machine in 3 operations, first grinding with machine fitted with coarse Carborundum stone, second grinding with medium grade Carborundum stone and final grinding with fine grade Carborundum stone. **Measurement** Measurement shall be in square meter of exact length and breadth (length and height in dado) of the floor. Rate shall include materials, mixing, laying, curing, finishing, grinding, polishing and labour etc., all complete.
H33a	**Cast in situ crazy marble flooring**	25mm thick crazy marble flooring consisting of 19mm thick cement mortar (1:2) with cement sand, and 6mm thick top course (1:1) with white or color cement with marble chips mixed with marble pieces including mixing, laying, grinding and polishing to smooth finished glazed floor surface, all complete, in m². **Materials** Cement: Portland cement (white as well) as per specification under

		"Concrete Work" Sand as per specification under "Concrete Work" Aggregate : hard and tough (granite stone) of 12mm gauge, well graded, clean and free from dust and dirt. Marble Chips: of 3mm gauge, having maximum size 3mm and minimum size or 1.5mm. Marble chips for terrazzo flooring shall be dry, dust free, sharp and hard. Marble Pieces: 19mm thick of size 200mm to 300mm dimension **Proportion** Base Course: 19mm thick cement mortar of 1:2. Upper Course: 6mm thick Marble chips and cement of specified (white or other) (1:1) 1 part marble chips; 1 part cement mixed with approved size & shape of marble pieces **Mixing** Cement concrete shall be prepared by mixing the ingredients dry by measuring with boxes to have the required proportion. First cement and sand shall be mixed dry and this dry mix shall be mixed with stone chips dry and then mixed by adding water slowly and gradually and mixed thoroughly to have a uniform mix. The marble chips and cement shall be mixed by measuring with boxes to have the required proportion, first dry mixed, and then thoroughly mixed by adding water gradually to have a uniform plastic mix. **Laying** The base shall be made rough and watered and given a cement wash and then the cement sand mortar of 1:2 shall be laid in 19mm thick layers in panels of 90 CM x 90 CM or as per instruction of Engineer. Panels shall be bounded by glass dividing strips 6mm thick and 25mm deep. After laying, the mortar shall be compacted by beating and tamping and leveled with wooden floats. Proper slope for draining wash water shall be provided as per instruction on the Engineer. Within 2 hours of laying of the bottom layer of cement mortar with pieces of marbles, the upper layer of marble chips and cement shall be laid, and the surface tamped lightly and finished perfectly level with straight edge float and trowel. Additional aggregates may be spread on the finished surface while compacting or rolling so that the final surface is covered with chips to extent of about 70% of the exposed area. **Curing** After about 2 hours of laying, the surface shall be covered with wet bags and kept wet and left undisturbed for 2 days. **Finish** The surface shall be ground by rubbing with sand stone blocks and all the cement in the surface removed. A neat cement wash shall then be given in the surface and left undisturbed for 6 days and the surface shall be ground with carborundum stones of different grades starting with coarse one and successively with finer ones, and rubbing shall be continued until the entire surface shows a uniform granular appearance. The surface should be kept wet during all these days. After final rubbing, the surface shall be thoroughly cleaned by washing with soft soap water and then with clean water. Finally, when the surface is absolutely dry, oxalic acid powder shall be

		rubbed well on the surface with pieces of felt with a few drops of water, and this operation shall be repeated until the surface becomes perfectly smooth and glossy. The surface shall be rubbed with wax to give a glazing surface. White cement or colored cement shall be used to have the required color as per specified or as per instruction of the Engineer. If required by the Engineer, the grinding shall be done by grinding machine in at least three operations, first grinding with machine fitted with coarse carborundum stone, second grinding with medium grade carborundum stone, and final grinding with fine grade carborundum stone. **Measurement** Measurement shall be in square meter of exact length and breadth of the floor or length and height in dado. Rate shall include all materials, mixing, laying, curing, grinding, finishing, polishing and labour etc. all complete.
11. I. Plaster, Punning and Pointing Works		
I1 – I7, I13 - I16	**General Plaster Works**	Plastering shall be started from top and worked down. All putlog holes shall be properly filled in advance of the plastering as the scaffolding is being taken down. Wooden screeds 75 mm wide and of the thickness of the plaster shall be fixed vertically 2.5 to 4 meters apart to act as gauges and guides in applying the plaster. The mortar shall be laid on the wall between the screeds using the plaster's float and pressing the mortar so that the raked joints are properly filled. The plaster shall then be finished off with a wooden straight edge reaching across the screeds. The straight edge shall be worked on the screeds with a small upward and sideways motion 50 mm or 75 mm at a time. Finally, the surface shall be finished off with a plaster's wooden float. Metal floats shall not be used. When recommencing the plastering beyond the work suspended earlier the edges of the old plaster shall be scraped, cleaned and wetted before plaster is applied to the adjacent areas. No portion of the surface shall be left out in a condition to be patched up later on. The plaster shall be finished to a true and plumb surface and to the proper degree of smoothness as required by the Engineer. The average thickness of plaster shall not be less than the specified thickness. The minimum Thickness over any portion of the surface shall not be less than the specified thickness minus 3 mm. Any cracks which appear in the surface and all portions, which sound hollow when tapped, or are found to be soft or otherwise defective, shall be cut out in rectangular shape and re-done as directed by the Engineer. The surface to be plastered shall be brushed clean mortar joints of brick masonry or hollow concrete walls or any other surface to be plastered shall be raked to a depth of approximately 12mm, and the surface brushed down with a stiff brush and thoroughly wetted. The surface shall be free of all dust, loose materials, grease etc. The mortar shall be first dry mixed, by measuring with boxes to

		required proportion, and then water added slowly and gradually and mixed thoroughly to uniform consistency. The thickness of the plaster shall not be less than 12 mm not more than 20mm. In case of plaster thicker than 20mm, it shall be built by two or more coats each coat not exceeding 12mm in thickness. Cement shall be as specified above. Sand shall be as before specified but shall be graded to a suitable fineness in accordance with the nature of the plaster, etc., in order to obtain the finish required. Lime for plastering shall be as before described in clause 414 and slaked and run at least four weeks before use. All other mixes shall be constructed in a like manner. Moist curing shall be accomplished by keeping the plaster uniformly damp by suitable means. Moist curing shall start during application and continue for not less than 7 days. **Hacking** Prices of all paving and plastering etc. shall include for hacking concrete ceilings, beams, floors etc., by approved means and for raking out joints of walls 12mm deep to form a proper key. Plastering on walls generally shall be taken to include flush faces of lintels etc., in same. Surfaces to be paved or plastered must be brushed clean and well wetted before each coat is applied. All cement plaster shall be kept continually damp in the interval between application of coats and for seven days after application of the final coat. Dubbing out where required shall be composed of similar material to that following. Partially or wholly set material will not be allowed to be used or re-mixed. **Samples** The Contractor shall prepare sample square meter of the plastering and paving as directed until the quality, texture and finish required is obtained and approved by the Project Engineer after which all plastering or paving executed shall conform with the respective approved sample. No payment shall be accounted for such sampling. **Finish** Care shall be taken to insure that finished plaster surfaces shall be plumb, square, straight and true to line. Generally all screeds and paving shall be finished smooth, even and truly level (unless specifically required to falls and currents, etc.), and paving shall be steel troweled or floated. Rendering and plastering shall be finished plumb, square, smooth and even. All surfaces to be plastered shall be thoroughly wetted before any plastering is commenced and the Contractor shall allow in his prices for dusting external angles with neat cement to give additional strength. No plastering will be allowed to take place until all chases for service have been cut, services installed and chases made good. On no account may finished plaster surface be chased and made good. All Work shall be to approval and any not complying with the above shall be hacked away and replaced, as directed, and at the

		Contractor's expense. **<u>Arises and Angles in Plastering</u>** All arises shall be clean and sharp or slightly rounded as directed including neatly forming miters. All making good shall be cut out to a rectangular shape, the edges undercut to form dovetail key and finished flush with face of surrounding plaster. All cracks, blisters and other defects must be cut out made good and the whole of the paving and plastering Work left perfect on completion. Screeds shall be in cement and sand (1:4) and rates shall include for thoroughly hacking, cleaning and soaking the receiving structure in water. No creed shall be laid on a dry structure in any circumstances. Where changes of floor finish occur they shall be divided by strips as specified. The Contractor's special attention is drawn to the fact that all screeds, immediately after the initial set has taken place, will be required to be continuously covered in water by the sand trap or other approved method for at least 10 days. Any screed panel that is found to be dry before the end of this period shall be removed at the discretion of the Project Engineer. Waterproofed external rendering shall consist of minimum 12mm cement and sand (1:4) rendering at the rate of 2.05 litre to 41 kgs of cement all in accordance with the manufacturer's instructions and finished perfectly true and even with a wood float. **<u>External Plastering and Rendering:</u>** Waterproofed External Plaster or Rendering work shall consist of minimum 12.5mm to 16mm as detailed in the Bill of Quantity with cement/ sand ratio 1:3 or 1:4 at the rate of 1/2 gallon to 90 lbs of cement all in accordance with the manufacturer's instructions and finished perfectly true and even with a wood float. **<u>Internal Plastering and Rendering:</u>** Internal Plastering or Rendering shall consist of minimum 12.5mm to 16mm as detailed in the Bill of Quantities with cement/ sand ration 1:3, 4 finished perfectly true and even with a wood float.
I8 – I12	**General Pointing Works**	For pointing, the mortar shall be filled and pressed into the raked out joints, before giving the required finish. The pointing shall then be finished to proper type given on the Drawing. If type of pointing is not mentioned on the Drawing the same shall be ruled pointing. For ruled pointing after the mortar has been filled and pressed into the joints and finished off level with the edges of the bricks, it shall while still green be ruled along the centre with a half round tool of such width as may be specified by the Engineer. The superfluous mortar shall then be cut off from the edges of the lines and the surface of the masonry shall also be cleaned of all mortar. Where external faces of the mortared masonry work will be backfilled or otherwise permanently covered up, the mortared joint shall be finished flush to the faces of the adjacent stonework. Where mortared masonry faces will remain exposed, the mortar joints

		shall be pointed to a consistent style as shown on the Drawing. Pointing shall be carried out using mortar 1:3 by volume of cement and sand or as shown on the Drawing. The mortar shall be filled and pressed into the raked out joints before giving the required finish. The pointing, if not otherwise mentioned, shall be ruled type for which it shall, while masonry work is still green, be ruled along the centre with half round tools of such width as may be specified by the engineer. The excess mortar shall,then, be taken off from the edges of the lines and shall not be unnecessarily plastered over the exposed stone works. The thickness of the joints shall not be less than 3mm for Ashlar masonry. Before applying the punning and pointing, the base surface shall be cleaned, any dust or loose particles removed and thoroughly wetted. The surface shall be free of all dust, loose materials, grease etc. The average thickness of the punning and pointing work shall not be less than 3 mm. The pattern shall be as per instruction of the Engineer or as shown in the drawings. The mortar shall be first dry mixed, by measuring with boxes to required proportion, and then water added slowly and gradually and mixed thoroughly to uniform consistency. The coat shall be finished by rubbing with a steel trowel and any depression shall be filled in and rubbed to shining surface. Cement shall be as specified above. Sand shall be as before specified but shall be graded to a suitable fineness in accordance with the nature of the plaster, etc., in order to obtain the finish required. All other mixes shall be constructed in a like manner. Moist curing shall be accomplished by keeping the plaster uniformly damp by suitable means. Moist curing shall start during application and continue for not less than 7 days. **Measurement** Measurement of works will be made in m2 of works as specified. **Payment** Payment for work will be made on the basis of contract unit price indicated in the BOQ. The payment will be full and final compensation for all material, labour, and equipment to complete the works as specified.
11. J. Paint Works		
J1 – J29	**General**	All materials shall be delivered on site intact in the original drums or tins and shall be mixed and applied strictly in accordance with the manufacturer's instructions and to the approval of the Engineer. All cement paints and washable distemper shall be applied by brush; emulsion paints shall be applied by means of a brush then rolled. All enamel paints are applied by brush or sprayed, and bitumen and bituminous base aluminium paints are applied by brush. Before application of any paint, adjoining surfaces shall be covered by cloth, or paper and wherever paints stains it shall be removed before leaving the work in same day. The only addition, which will be allowed to be made locally will be liquid thinners supplied or recommended by the manufacturers and none shall be, thinned more than approved by the Engineer.

		Preparation and priming of surfaces: Concrete and Cement rendered surfaces shall be smooth and free from defects and shall be allowed to dry out thoroughly. Surfaces shall be thoroughly brushed down and left free from all efflorescence, dirt and dust. All such surfaces, which are to be finished with oil or enamel paint, shall be primed with two coats of alkali resisting primer. Plaster surfaces shall be perfectly smooth and free from defect. All such surfaces shall be allowed to dry for a minimum period of four weeks. Surfaces shall be stopped with approved plaster compound, rubbed down flush, thoroughly brushed down and left free from all efflorescence, dirt and dust. Fair-faced surfaces shall be dry, brushed down and free from dust or dirt and shall be treated with an approved alkali resisting primer (for plastic emulsion). Metal work generally shall be thoroughly wire brushed to remove all scale, rust, and through sand papering shall be done before any painting is done. Where severe rust exists, the special anti-rust primer must be used. After painting it shall be stored in covered shed and 60cm above ground. Shop primed surfaces shall have bare places touched up with an approved metal primer. Un-primed surfaces shall be given one coat of primer as last. Galvanized surfaces, which are thoroughly weathered, shall be, brushed down with white spirit, washed down and given one coat of zinc chromate primer. Bituminous-coated surfaces shall be given as isolating coat of shellac knotting followed by an approved metal primer. Woodwork generally shall be rubbed down, given one coat shellac knotting, one coat wood self knotting primer, and all cracks, nail holes, defects, and uneven surfaces, etc., stopped and faces up with hard stopping rubbed down flush. Before oiling woodwork all stains must be removed and uniform colour obtained and filled. **COLOURS AND PRIMING:** The priming undercoats and finishing coats shall each be of differing tints and the priming and undercoats shall be of the correct types and tints to suit the respective finishing coats in accordance with the following instructions. All finishing coats shall be of colours and tints selected by the Engineer. The paintwork shall have and uniform finish and all paint for external work shall be exterior quality only. **Rubbing Down:** Each coat of paint shall be properly dried and shall be well rubbed down with fine glass paper before the next coat is applied. The paintwork shall be finished smooth and free from brush marks. Samples Cards of all paints, etc., shall be submitted to and samples prepared for approval of the Engineer before laying on and such samples, when approved, shall become the standard for work. **Program:** The contractor shall so arrange his program of work that all other

		Trades are completed and away from the area to be painted when the painting begins. **Ironmongery, Protection and Cleaning Up:** All ironmongery shall be removed from joinery before painting is commenced and shall be cleaned and renovated of necessary and re-fixed after completion painting. Cover up all floors, etc., with non-resinous sawdust or other approved covering when executing and all painting decorating work. Paint splashes, spots and stains shall be removed from floors, woodwork, etc., and damaged surface touched up and the whole of the work left clean upon completion. **Materials:** All paint materials of specified brand shall be obtained from the manufacturer or authorized dealer. All sealers, primers and undercoating are to be obtained from the makers of the finishing materials and are to be in accordance with their recommendation for the particular finish required. **Knot Sealer:** For use on knots and resinous portions of woodwork. Stopping and Filling composed of parts putty to one part of stiff white lead. **Lacquer:** Approved polyurethane eggshell clear lacquer applied in accordance with the manufacturer's instructions. Polish shall be an approved brand of wax polish. Oil shall be best quality linseed oil. Filler for polished or oiled surfaces to be Beeswax filler. **Wood Preservative:** All wood work, as specified or instructed shall, be treated after cutting and preparation but before assembly or fixing with three coats of solution consisting of one part if Atlas "A" wood preservative brown grade to three parts of water. The solution is to the brushed in all faces of all timbers unless exposed to view and painted. This is applicable in the wood frame contact with masonry and roof purling, batten and counter rafter. The contractor shall note that this solution is HIGHLY POISONOUS and shall take all necessary precautions and instruct his workmen accordingly. **Paint Application:** Painting Items as described hereafter shall comprise the following, and shall all include for preparing and priming surfaces as above described: - Cement Paint : Apply two coats. Plastic Emulsion : Apply a minimum of three coats, using a thinning medium or water only if and as recommended by the manufacturer. An approved plaster primer tinted to match may be substituted for the first coat. Paint : Apply two undercoats and one finishing coat of enamel gloss oil paint. Flat oil paint : Apply two coats of flat oil paint, using thinning medium in accordance with the manufacturer's instructions.

		Oil : Apply two coats of linseed oil. Wax Polish : Apply a minimum of two coats to approval. Lacquer : Apply three coats of Polythene lacquer as described, to approval. Prime : Prepare and prime only before fixing. **Moulded cornices and coves.** (a) Length shall be measured at the centre of the girth. (b) Moulded cornices and coves shall be given in square metres the area being arrived at by multiplying length by the girth. (c) Flat or weathered top to cornices when exceeding 15 cm in width shall not be included in the girth but measured with the general plaster work. (d) Cornices which are curved in their length shall be measured separately. If the old Paint of existing surface is firm and sound, it shall be cleaned of grease, smoke etc. The surface shall then be rubbed down with sand paper and dusted. Rusty patches shall be cleaned up and touched with synthetic enamel paint. If the old Paint is blistered and flaked, it shall be completely removed. **Measurement:** Measurement shall be in square meters of the actual covered area of the paints. Nothing extra shall be allowed for painting any rough surface. The rate shall include for specified coats inclusive of materials, labour, scaffolding all complete.
J1, J2, J13	**White wash**	For whitewashing, wherever scaffolding is necessary, it shall be erected on double supports tied together by horizontal pieces, over which scaffolding planks shall be fixed. No ballies, bamboos or planks shall rest on or touch the surface which is being white washed. For all exposed brick work or tile work, double scaffolding having two sets of vertical supports shall be provided. The supports shall be sound and strong, tied together with horizontal pieces over which scaffolding planks shall be fixed. Where ladders are used, pieces of old gunny bags shall be tied on their tops to avoid damage or scratches to walls. For white washing the ceiling, proper stage scaffolding shall be erected. **Preparation of Surface** Before new work is white washed, the surface shall be thoroughly brushed free from mortar droppings an foreign matter. In case of old work, all loose particles and scales shall be scrapped off and holes in plaster as well as patches of less than 50 cm area shall be filled up with mortar of the same mix. Where so specifically ordered by the Engineer-in-Charge, the entire surface of old white wash shall be thoroughly removed by scrapping. Where efflorescence is observed the deposits should be brushed clean and washed. The surface shall then be allowed to dry for atleast 48 hours before white washing is done. **Preparation of Lime Wash** The lime wash shall be prepared from fresh stone white lime. The lime shall be thoroughly slaked on the spot, mixed and stirred with sufficient water to make a thin cream. This shall be allowed to stand

		for a period of 24 hours and then shall be screened through a clean coarse cloth. 40 gm of gum dissolved in hot water, shall be added to each 10 cubic dicimetre of the cream. The approximate quantity of water to be added in making the cream will be 5 litres of water to one kg of lime. Indigo (Neel) upto 3 gm per kg of lime dissolved in water, shall then be added and stirred well. Water shall then be added at the rate of about 5 litres per kg. of lime to produce a milky solution. **Application** The white wash shall be applied with moonj brushes to the specified number of coats. The operation for each coat shall consist of a stroke of the brush given from the top downwards, another from the bottom upwards over the first stroke, and similarly one stroke horizontally from the right and another from the left before it dries. Each coat shall be allowed to dry before the next one is applied. Further each coat shall be inspected and approved by the Engineer-in-Charge before the subsequent coat is applied. No portion of the surface shall be left out initially to be patched up later on. For new work, three or more coats shall be applied till the surface presents a smooth and uniform finish through which the plaster does not show. The finished dry surface shall not show any signs of cracking and peeling nor shall it come off readily on the hand when rubbed. For old work, after the surface has been prepared, a coat of white wash shall be applied over the patches and repairs. Then a single coat or two or more coats of white wash as stipulated in the description of the item shall be applied over the entire surface. The white washed surface should present a uniform finish through which the plaster patches do not appear. The washing on ceiling should be done prior to that on walls. **Protective Measures** Doors, windows, floors, articles of furniture etc. and such other parts of the building not to be white washed, shall be protected from being splashed upon. Splashings and droppings, if any shall be removed by the contractor at his own cost and the surfaces cleaned. Damages if any to furniture or fittings and fixtures shall be recoverable from the contractor. **Measurements** Length and breadth shall be measured and area shall be calculated in sqm. Measurements for Jambs, Soffits and Fills etc. for openings shall be as described in plaster. Cornices and other such wall or ceiling features, shall be measured along the girth and included in the measurements. The number of coats of each treatment shall be stated. The item shall include removing nails, making good holes, cracks, patches etc. not exceeding 50 sq. cm. each with material similar in composition to the surface to be prepared. **Rate** The rate shall include all material and labour involved in all the operations described above.

J3	**Distemper works**	Washable distemper of required colour as approved by the Engineer shall be used, conform to IS: 427-latest revision. Before application of the distemper the shade shall be approved by the Engineer. The paint (SKK-Japanese, Nerolac, Berger or equivalent) shall be water based washable distemper as per NS, IS specification. Only fresh distemper shall be used, hard or set shall not be used. **Preparation of Paint** The washable distemper powder shall be stirred slowly in clean water using 0.6 litre of water per kg of distemper or as specified by the manufacturer. Warm water shall preferably be used. It shall be allowed to stand for at least 30 minutes (or if practicable over night) before used. The mixture shall be well stirred before and during use to maintain an even consistency. Distemper shall not be mixed in larger quantity than is actually required for one day's work. **Preparation of Surface** Before new work is distempered, the surface shall be thoroughly brushed free from mortar dropping and other foreign matter and sand papered smooth. New plaster surfaces shall be allowed to washable for at least six weeks before applying distemper. Pitting in plaster shall be made good with plaster of Paris mixed with the colour to be used. The surface shall then be rubbed down again with fine grade sandpaper and made smooth. A coat of distemper shall be applied over the patches. The patched surface shall be allowed to washable thoroughly before the regular coat of distemper is applied. **Application** For new work, the treatment shall consist of a priming coat of whiting followed by the application of two or more coats of distemper till the surface shows and even colour. For each coat, the entire surface shall be coated with the mixture uniformly with proper distemper brushes in horizontal strokes followed immediately by vertical ones, which together shall constitute one coat. The subsequent coats shall be applied only after the previous coat has dried. The finished surface shall be even and uniform and shall show no brush marks. Enough distemper shall be mixed to finish one room at a time. The application of a coat in each room shall be finished in one operation and no work shall be started in any room, which cannot be completed the same day. After each day work, the brushes shall be washed in hot water and hung down to washable. Old brushes, which are dirty or caked with distemper, shall not be used. On plastered, POP surface (paint shall be prepared with sand papering), putting, and two coats of primer. The paint is applied in two coats of washable distemper with roller or brush. The surface should be properly cleaned and treated with water based primer as per manufacturer's specifications. Rectification of defects in plaster/POP with broken edges should be done by using a proper colour putty, paste as per manufactures specifications. The surface on which paint is applied shall become hard washable in

		16 hours. The necessary single / multistage scaffoldings required for the work shall be provided as detailed out under coatings. The equipment, roller or brush used on the work should be immediately washed with water to facilitate future use. **Measurement** Measurement shall be in square meters of the actual covered area of the paints. Nothing extra shall be allowed for painting any rough surface e.g. external sand - faced plaster or work in short width or surface in any shape. The rate shall include for two or more coats inclusive of materials, labour, scaffolding all complete.
J4	**Water proof cement paint works**	Cement paint of required colour shall be of ready mixed type in sealed container of approved brand (Snowcem India Ltd., or equivalent brand or manufacture)r conforming to IS: 5410 - latest revision, approved by the engineer in sealed tins, shall be used. Before application of the cement paint the shade shall be approved the Engineer. It shall be procured either in 50 kg. Container or 25 kg. Container. All such container shall have unbroken seal with manufacturer's name and trade marks as well as a description of contents all clearly marked. Such paint shall be mixed and applied strictly in accordance with the manufacturer's instructions and with the approval of site In-charge. All materials shall be stored in dry place. **Preparation of Paint** Only fresh cement paint shall be used, hard or set paint shall not be used. The container shall be made loose by rolling and shaking the container before opening. Cement paint shall be mixed with water in two stages. First a paste shall be prepared by mixing 2 parts of cement paint powder with one part of water by volume and immediately this shall be thinned by adding another part of water to have uniform solution of consistency of paints. Care shall be taken to add the cement paint gradually to the water and not vice versa. The second stage shall comprise of adding further one part of water to the mix and stirring thoroughly to obtain a liquid of workable and uniform consistency. In all cases the manufacturer's instructions shall be followed meticulously. Cement paint shall be mixed in such quantities as can be used up within an hour of its mixing as otherwise the mixture will set and thicken affecting flow and finish. The lids of cement paint shall be kept tightly closed when not in use, as by exposure to atmosphere the cement paint rapidly becomes air set due to its hygroscopic qualities. **Preparation of Surface** Before application of paint all dust and foreign materials shall be removed from the surface by use of wire brush. All holes, cracks and abrasion shall be fill with plaster of Paris, properly prepared and applied and smoothed off to match adjoining surfaces. Any loose or uneven areas or any major cracks or defects in the concrete or plaster back ground shall be cut out and made good and the repairs allowed to dry thoroughly. Any efflorescence shall be removed by dry brushing The surface shall be allowed to run off. **Application** The fresh mixed paint shall be frequently stirred during application and no mixture (paint) shall be used after an hour of mixing. A vertical

		stroke with another horizontal stroke shall be termed one coat. Paint solution shall be applied to the surface with hair brushed/roller in a number of coats to get uniform finish. After the first coat of the paint has hardened, it shall be cured with water at least for 24 hours before the second coat is applied. Similarly required number of coats shall be given to get an even and uniform shade. It shall be kept damp at least for seven days. Sample of workmanship shall be approved by the Engineer prior to commencement of work. The final painted surface shall exhibit uniform and good finished appearance. Measurement shall being square meter of actual covered area. No extra shall be allowed for scaffolding, curing and painting corners, plaster strips etc. **Measurement / Payment** Measurement shall be in square meters of the actual covered area of the paint. Nothing extra shall be allowed for painting any rough surface e.g. external sand - faced plaster or work in short width or surface in any shape. The rate shall include for two or more coats inclusive of materials, labour, scaffolding all complete.
J5 a, J15 – J17	**Enamel Paints**	The primer and paint shall be of approved quality and of approved manufacture like Asian Paints, Nerolac, Jensolin, Berger British Paints India Ltd., Johnson and Nicholson, India or equivalent brand approved by the Engineer. These materials shall be ready mixed and in sealed tins with manufacturer's name, colour and instruction clearly painted in the container. **Preparation of Surface** All surfaces to be painted shall be planed and thoroughly sand papered, first by using No. 120 sandpaper. Ordinary putting shall fill up nail holes, cracks or other in equalities. Putting shall be made up of 2 parts of best quality whiting (absolutely dead stone lime) 1 part if white lead mixed together in linseed oil and kneaded (3 oz. of linseed oil to 1 lb. of whiting). A primer coat shall be locally applied in holes, cracks etc. before putty is applied. The putty/paste fillers shall be of approved quality and manufacture and shall be applied to the surface with a knife or other sharp edged tools after the priming coat as well as after each undercoat. After the surface is dry, it shall be sand paper by using No. 60 sandpaper. Surface so prepared shall be painted with one coat of primer. The primed surface when dry shall be sand papered by using No. 100 sand paper. The primed surface so prepared shall be painted with one coat of selected enamel using bristle brush and not horsehair ones. The paint shall be applied in thinnest possible layers with parallel strokes Care shall be taken to ensure the surface being free from dust or other foreign material before priming or enamelling the surface. No paint shall splash on the floor, wall jambs, sill or other part of the building. **Application** **On Wood work** After preparing and after the priming coat has been applied a topcoat

		shall be applied. The primed surface so prepared shall be painted with one coat of selected enamel using bristle brush and not horsehair ones. The paint shall be applied in thinnest possible layers with parallel strokes. Another coat shall be applied after the previous coat is dry. Care should be taken that dust or other foreign materials do not settle or otherwise disfigure the various coats. The same brand of materials will be used for various coats. The paint shall be used and applied as per manufacture's printed instruction. The paints shall be applied with bristle brushes and not horse hair ones. The paints shall be applied in the thinnest possible layers with parallel drawings, no flowing down shall be allowed. Painting to false ceiling and acoustic materials such as thermo Cole, perforated acoustic tile, soft board etc. shall be done by spray painting only. The Engineer prior to commencement of work shall approve sample of workmanship. **On metal surface** The paint shall be continuously stirred in the container so that its consistency is kept uniform throughout. The painting shall be laid on evenly smoothly by means of crossing and laying - off. The crossing and laying off consists of covering the area with paint, brushing the surface hard for the first time and then brushing alternatively in opposite directions, two or three times and then finally brushing lightly in a direction at right angles to the same. In this process no brush marks shall be left after the laying – off if finished. The full process of crossing and laying - off will constitute one coat. Where so stipulated, the painting shall be carried out using spray machines suited for the nature and location of the work to be carried out. Only skilled and experienced workmen shall be employed for this class of work. Paints used shall be brought to the requisite consistency by adding suitable thinner. Spraying shall be carried out only in dry conditions. No exterior painting shall be done in damp foggy or rainy weather. Surface to be painted shall be clean, dry, smooth, and adequately protected from dampness. Each coat shall be applied in sufficient quantity to obtain complete coverage, shall be well brushed and evenly worked out over the entire surface and into all corners, angles and crevices allowed to thoroughly dry. Second coat shall be of suitable shade to match final colour, and shall be approved by the Engineer before final coat is started. Allow at least 48 hours drying time between coats for interior and 7 days for exterior work, and if in the judgement of the Engineer more time is required it shall be allowed. Finished surfaces shall be protected from dampness and dust until completely dry. Finished work shall be uniform, of approved colour, smooth and free for runs, sags, defective brushing and clogging. Make edges of paints adjoining other materials of colours sharp and clean, without overlapping. **Finish:** The painted surfaces shall present uniform appearance and semi – glass finish free from steaks, blisters etc. **Measurement** Measurement shall be in square meters of the actual covered area. Nothing extra shall be allowed for painting any rough surface e.g.

<table>
<tr><td></td><td></td><td>external sand - faced plaster or work in short width or surface in any shape. The measurement shall be as follows:
<table>
<tr><th>Description of Work</th><th>Measurement Method</th><th>Overlapping Factor</th></tr>
<tr><td>Panelled or Framed</td><td rowspan="8">Measured flat (not girthed) end of frame to frame.</td><td>1.5 for each side</td></tr>
<tr><td>Ledged & Battened</td><td>1(1/8) for each side.</td></tr>
<tr><td>Flush</td><td>1 for each side.</td></tr>
<tr><td>Fully glazed or gauged</td><td>0.5 for each side.</td></tr>
<tr><td>Part panelled and part</td><td>1 for each side.</td></tr>
<tr><td>Fully ventilated or Louvered</td><td>1.5 for each side.</td></tr>
<tr><td>Boarding with covered fillet and match boarding</td><td>1.5 for each side.</td></tr>
<tr><td>Tile & slate battening</td><td rowspan="2">Measured flat (no deduction for open spaces)</td><td>3/4 for overall</td></tr>
<tr><td>Trellis or Jaffri</td><td>1 for Painting all over</td></tr>
<tr><td>Gates and open palisade fencing including standard braces, rails, stays</td><td>The height shall be taken from the lower end of the palisade up to the top of the palisade but not to the standards if they are higher.</td><td>1 for Painting all over</td></tr>
<tr><td>Carved or enriched work</td><td>Measured flat</td><td>1.5 for each face.</td></tr>
<tr><td>Corrugated sheet.</td><td>Measured flat</td><td>114% of flat area</td></tr>
</table>
The rate shall include for specified coats inclusive of materials, labour, scaffolding, all complete</td></tr>
<tr><td>J5 b, J18, J19</td><td>Emulsion Paints</td><td>On the plastered/POP surface, paint shall be prepared with sand papering, putting, and two coats of primer. The paint is applied in two coats of acrylic emulsion with roller or spray. The surface should be properly cleaned and treated with water based primer as per manufacturer’s specifications. Rectification of defects in plaster, POP with broken edges should be done by using a proper colour putty, paste as per manufactures specifications.
The surface on which paint is applied shall become hard dry in 12 hours. The necessary single / multistage scaffoldings required for the work shall be provided as detailed out under coatings. The equipment, rollers or spray used on the work should be immediately washed with water to facilitate future use. After the first coat of the paint has hardened, the second coat is applied as instructed by the engineer. Similarly required number of coats shall be given to get an even and</td></tr>
</table>

		uniform shade.
J10	**Chapra paint**	Chapra (french Wood) polish is prepared from the chapra mixed with spirit. Two layers of resin is applied by the smooth cotton clothes and dried. **Preparation of Surface** Before application of Chapra polish, the timber surfaces shall be thoroughly sand papered to obtain smooth surfaces and all the dust are removed from the surfaces. A coat of primer of chalk power mixed with resin or readymade approved putty is applied and sand papered to fill in the voids and joints. **Preparation & Application** The Chapra polish shall be made by mixing Chapra granules, thinner and spirit. The chapra must completely dissolve in the spirit. Over the primed surfaces, the Chapra polish of approved quality shall be applied with smooth cotton cloth with firm rubbing and spread evenly. The cloth shall be of good quality and perfectly cleaned. Chapra wood finish shall be reapplied at least three times, after sandpapering with finer sand paper to get the final finish & best result. **Measurement** The measurement shall be in square metres of the finished work. The rate shall include all the materials and labour, all complete.
J11, J12, J22, J23	**Red Lead Primer**	Red Lead primer paint shall be of approved brand. The lead content in the paint shall be less than 60% by weight. The site in charge shall examine the paints before seal is broken
J24, J25	**Plastic felt**	Refer to general provisions above and the manufacturer's technical specification brochures
J27	**Japanees Texture paint**	
J28	**Heritage Wall Surface Texture**	
J29	**Anti Termite Treatment**	Prevention of the termite from reaching the super-structure of the building and its contents can be achieved by creating a chemical barrier between the ground, from where the termites come and other contents of the building which may form food for the termites. This is achieved by treating the soil beneath the building and around the foundation with a suitable insecticide. **Materials** ***Chemicals:*** Any one of the following chemicals in water emulsion to achieve the percentage concentration specified against each chemical shall be used: (i) Chlorphriphos emulsifiable concentrate of 20% (ii) Lindane emulsifiable concentrate of 20% To achieve the specified percentage of concentration, Chemical should be diluted with water in required quantity before it is used. Graduated containers shall be used for dilution of chemical with water in the required proportion to achieve the desired percentage of concentration. . *Safety Precautions :* Chemical used for antitermite treatment are insecticides with a persistent action and are highly poisonous. This chemical can have an adverse effect upon health when absorbed

		through the skin, inhaled as vapours or spray mists or swallowed. The containers having emulsifiable concentrates shall be clearly labeled and kept securely closed in stores so that children or pet cannot get at them. Storage and mixing of concentrates shall not be done near any fire source or flame. Persons carrying out chemical soil treatments should familiarize themselves and exercise due care when handling the chemicals whether in concentrated or in diluted form. After handling the concentrates or dilute emulsion, worker shall wash themselves with soap and water and wear clean clothing especially before eating and smoking. In the event of severe contamination, clothing shall be removed at once and the skin washed with soap and water. If chemical has splashed into the eyes, they shall be flushed with plenty of soap and water and immediate medical attention shall be sought. The use of chemical shall be avoided where there is any risk of wells or other water supplies becoming contaminated. ***Treatment*** ***Treatment along outside of foundations:*** The soil in contact with the external wall of the building shall be treated with chemical emulsion at the rate of 7.5 litres per square metre of vertical surface of the sub-structure to a depth of 300 mm. To facilitate this treatment, a shallow channel shall be excavated along and close to the wall face. The chemical emulsion shall be directed towards the wall at 1.75 litres per running metre of the channel. Rodding with 12 mm diameter mild steel rods at 150 mm apart shall be done in the channel. If necessary, for uniform dispersal of the chemical to 300 mm depth from the ground level. The balance chemical of 0.5 litre per running metre shall then be used to treat the backfill earth as it is returned to the channel directing the spray towards the wall surface. If there is a concrete or masonry apron around the building, approximately 12 mm diameter holes shall be drilled as close as possible to the plinth wall about 300 mm apart, deep enough to reach the soil below and the chemical emulsion pumped into these holes to soak the soil below at the rate of 2.25 litres per linear metre. In soils which do not allow percolation of chemicals to desired depth, the uniform disposal of the chemical to a depth of 300 mm shall be obtained by suitably modifying the mode of treatment depending on site condition. In case of RCC foundations the soil (backfill) in contact with the column sides and plinth beams along with external perimeter of the building shall be treated with chemical emulsion at the rate of 7.5 litres/sqm. of the vertical surface of the structure. To facilitate this treatment, trenches shall be excavated equal to the width of the shovel exposing the sides of the column and plinth beams upto a depth of 300 mm or upto the bottom of the plinth beams, if this level is less than 300 mm. The chemical emulsion shall be sprayed on the backfill earth as it is returned into the trench directing the spray against the concrete surface of the beam or column as the case may be. ***Treatment of Soil under Floors :*** The points where the termites are likely to seek entry through the floor are the cracks at the following

		locations: (a) At the junction of the floor and walls as result of shrinkage of the concrete; (b) On the floor surface owing to construction defects; (c) At construction joints in a concrete floor, cracks in sections; and (d) Expansion joints in the floor. Chemical treatment shall be provided in the plinth area of ground floor of the structure, wherever such cracks are noticed by drilling 12 mm holes at the junction of floor and walls along the cracks on the floor and along the construction and expansion joints at the interval of 300 mm to reach the soil below. Chemical emulsion shall be squirted into these holes using a hand operated pressure pump to soak the soil below until refusal or upto a maximum of one litre per hole. The holes shall then be sealed properly with cement mortar 1:2 (1 cement: 2 coarse sand) finished to match the existing floors. The cement mortar applied shall be cured for at least 10 days as per instruction of Engineer-in-charge. ***Treatment of Voids in Masonry :*** The movement of termites through the masonry wall may be arrested by drilling holes in masonry wall at plilnth level and squirting chemical emulsions into the holes to soak the masonry. The holes shall be drilled at an angle of 45 degree from both sides of the plinth wall at 300 mm intervals and emulsion squirted through these holes to soak the masonry using a hand operated pump. This treatment shall also be extended to internal walls having foundations in the soil. Holes shall also be drilled at wall corners and where door and window frames are embedded in the masonry or floor at ground. Emulsion shall be squirted through the holes till refusal or to a maximum of one litre per hole. Care shall be taken to seal the holes after the treatment. ***Treatment at Points of Contact of Wood Work :*** The wood work which has already been damaged beyond repairs by termites shall be replaced. The new timber shall be dipped or liberally brushed at least twice with chemical in oil or kerosene. All existing wood work in the building which is in contact with the floor or walls and which is infested by termites, shall be treated by spraying at the points of contacts with the adjoining masonry with the chemical emulsion by drilling 6 mm holes at a dowonward angle of about 45 degree at junction of wood work and masonry and squirting chemical emulsion into these holes till refusal or to a maximum of half a litre per hole. The treated holes shall then be sealed. Infested wood work in chaukhats, shelves, joints, purlins etc., in contact with the floor or the walls shall be provided with protective treatment by drilling holes of about 3 mm diameter with a downward slant to the core of the wood work on the inconspicuous surface of the frame. These holes should be at least 150 mm centre to centre and should cover in entire frame work. Chemicals shall be liberally infused in these holes. If the wood is not protected by paint or varnish two coats of the chemicals shall be given on all the surfaces and crevices adjoining the masonry. **Measurement** Measurement shall be in square meter of applied surface of total plinth area, flat measurement only and Rate

		Rate shall be inclusive of all labor and materials.
11. K. Damp Proof Works		
K1, K2	**Concrete DPC**	The damp proof course shall consist of cement, sand/stone aggregate mixed with 2% of Accoproof, Impermo or Cement seal by weight of cement and painted with two coal tar paint over it. Damp proof Course will be provided to all walls, which do not have tie beam above ground level as per the details of the working drawing. **Water Proofing Compound** Integral cement water proofing compound conforming to IS 2645 and of approved brand and manufacture, enlisted by the Engineer-in-Charge from time to time shall be used. The contractor shall bring the materials to the site in their original packing. The containers will be opened and the material mixed with dry cement in the proportion by weight, recommended by the manufacturers or as specifically described in the description of the item. Care shall be taken in mixing, to see that the water proofing material gets well and integrally mixed with the cement and does not run out separately when water is added. Cement shall be fresh Portland cement. Sand shall be clean course of 5mm size and down free from mica and clay. Stone aggregate shall be hard and tough of 12.mm size well graded and free from dust and dirt. Water proofing compound other than Accoproof, Impermo or Cement seal may be used after obtaining permission from the site-in–charge regarding the acceptability of the compound and quantity required for desired result. Cement shall be thoroughly mixed with required 2%by weight of waterproofing compound, and then mixed dry with the required volume of sand to make a proportion of 1:2. The cement sand mix shall then be thoroughly mixed dry with stone aggregate to maintain required proportion. Clean water shall then be mixed gradually to give a plastic mix of required consistency. The mixing shall be done by turning at least three times to give uniform and homogeneous concrete. All the mixing shall be done in an impervious masonry platform. Before lying concrete, the level of the surface of the plinth shall be checked longitudinally and transversely. All joints shall be racked and surfaces moisten by pouring clean water on it. The inside of the formwork shall be covered with polyethylene sheet so as to make water- tight joint between the formwork and the concrete. Concrete shall be laid uniformly by tamping to make dense concrete, leveled both transversely and longitudinally. The damp proof course shall be laid continuously except across doorways. Construction joints if unavoidable shall be given at the site of doors or wall opening. Such joints shall be sloped, and such sloped surface shall be applied with neat cement wash before starting concerning on following days. Hardened concrete shall be cured for 15 days. Shuttering may be removed after 72 hours. Two coats of hot coal tar shall be applied on the cured cement concrete. The first coat shall be applied at 1.5 Kg. per sq. and the paint shall be blinded immediately with coarse sand and the surface is

		tamped lightly. Second coat of hot coal tar shall be applied at the rate of 1 Kg. per sq. uniformly over the surface. Such surface shall be immediately blinded with coarse sand and tamped lightly. Lay over the full width of the walls and at the height shown on the drawings a mortar screed of sufficient thickness to form a level surface and cover the screed with two coats of hot bitumen. Measurement Measurement of works will be made in m³ of works as specified. **Payment** Payment for work will be made on the basis of contract unit price indicated in the BOQ. The payment will be full and final compensation for all material, labour, and equipment to complete the works.
K3	**Bitumen Paint**	Refer tarfelt works below
K4	**Polythene Sheet**	To be approved by the Engineer-in-Charge
K5 – K6	**Tarfelt**	Prior to the laying of the roofing materials on the slope or flat roofs, one layer of finished underlay shall be provided on thin news paper sheets. The underlay shall work as the false ceiling for the room as well as shall act as the water-sealing agent to the room. This is achieved through the following: Waterproof and Termite resistant Plywood: Kit Plywood of Phenol Bonded, hot pressed and termite resistant special plywood with manufacturer's guarantee towards their reliability to the specifications, of the kind, as per the Indian Standards. The sizes and the thickness shall be as per the detail designs and as specified in the bill of quantities. Samples of the materials and their manufacturer's warranty card shall be submitted for Project In-charges approval. Tarfelting and Bitumen Paints: Tar felt: Shalimar Tar felt or equivalent shall be according to IS. Tar felt supplied should be packed in rolls with IS Certification mark. Tar felt shall be free from visible external defects, such as holes, oil patches, ragged or untrue edges, breaks, cracks, tears, protuberances and indentations. Unless otherwise stated, tar felt supplied shall be in widths of 90 cm and 100cm and generally in lengths of 10m and 20m. The sample should be submitted to the Engineer In-charge before bulk purchase, and should be approved by him. Bitumen Mastic: Shall be of approved quality conforming to IS: 3037-1965. This shall be supplied in sealed tins with IS Certification mark. Laying: The felt shall be laid in lengths at right angles to the direction of the run off gradient, with paper or plastic barrier between tar felt and concrete, commencing at the lowest level and working up to the crest such that the overlaps of the adjacent layers of felt offers the minimum obstruction to the flow of water. In the next layer, mastic asphalt or bitumen is spread, and tar felt is laid. The tar felt laid should be in three layers. The bitumen mastic (binding material) shall be prepared by heating to the correct working temperature and conveyed to the point of work in a bucket or pouring can. Each coat of each bay shall be spread evenly and uniformly by means of a float to the recommended

		thickness, on to the previously prepared surface, the isolating membrane or the preceding coat. Each coat of bitumen mastic shall be followed, without delay by the succeeding, since exposure to contamination (by dust or dirt) might impair adhesion and cause blistering. The finished floor shall not sound hollow when tapped with wooden mallet. The tar felt before laying shall be first cut to the required lengths, cleaned of dusting materials and laid out flat on roof. Each length of felt prepared for laying shall be laid in position and rolled up for a distance of half of its length. The hot binding material shall be poured on to the roof across the full width. In case of rolled felt, the felt is steadily rolled out and pressed down. The excess bonding material is squeezed out at the ends and is removed as the laying spreads. When the first half of the strip of felt has been bonded to the roof, the other half shall be rolled up and then unrolled on to the hot bonding material in the same way. Minimum overlap at the ends and the sides of strips of felt shall not be less than 15cm. All overlaps shall be firmly bonded with hot bitumen. The laying of second layer of felt shall be so arranged that the joints be staggered with those of the layer beneath it. **Measurement** Measurement of all the works will be made in m2 of works as specified. **Payment** Payment for work will be made on the basis of contract unit price indicated in the BOQ. The payment will be full and final compensation for all material, labour, and equipment to complete the works as specified.
K7	**Elastometric water Proofing**	Providing and applying of two component acrylic polymer modified cementations flexible membrane system (Perma guard, Aquafin 2K/M or equivalent) as approved by engineer, on RCC rooftop, basements, terraces and sunken slabs etc including injection system (pressure grouting) on water leakage area and new & old concreting joint where necessary and filling Perma bond SBR modified mortar or equivalent on junction between floor and parapet wall area with "V" shape groove cutting as specified by the site engineer all complete: **Measurement / Payment** Measurement shall be in square meter of exact length and breadth. Rate shall include materials, mixing, laying, curing, finishing and labour etc., all complete. Note: The installation specifications for the approved material if different, the manufacturers specification shall be followed after site engineer's approval. Technical specification from manufacturer and the warranty provision/document shall be submitted to the site engineer before approval by the contractor.
K8	**Semi flexible polymer coating system**	Providing and applying 2 coat waterproofing coating system for protecting concrete and masonry on RCC roof top, basements slabs, terrace and sunken slabs area over the entire surface including surface preparation, pipe lines and other joints 2 coat shall be applied by brush at the ratio of 1:2 (Perma Bond AR /

		Shield liquid/ tapecrete P 151 and fresh grey cement powder) or as approved by site engineer according to respective manufacturers specification **Materials:** Approved polymer materials from manufacturer (Tapecret P 151, Perma Bond AR/ Perma Shield or equivalent) as approved by site engineer shall be applied. Technical specification from manufacturer and the warranty provision / document shall be submitted to the site engineer by the contractor. **Mixing:-** The polymer shall be mixed with neat cement in the ratio of 2 part cement: 1 part polymer by weight. The mixture has to be stirred thoroughly until no air bubbles remain in the mix. Any lump found in the mix should be removed. **Surface preparation:** The surface shall be cleaned to remove all dust, foreign matters, loose materials and any deposits of contamination which could affect the bond between the surface and the waterproofing coating. By scarifying, grinding, water blasting, sand blasting, acid washing or other approved method. New flat surface like sub base concrete shall be made reasonably smooth so as not to impede the application of the waterproofing coating and to avoid sharp projection. All concrete shall be thoroughly pre-wetted for at least prior to th application of the coating by pouring water on flat surface or by vigorously spraying water on vertical/ inclined surfaces. Depressions shall be filled and levelled after engineers approval **Application:-** The mix shall be applied in 2 coats by brush on rendered and / or prepared surface. First coat should be allowed to stir dry for 5-6 hours. The coatings shall be applied in uniform thickness to horizontal and vertical surfaces. The surface should be made wet before application in case of porous structure. **Curing and Protection** The surface after application shall be kept moist for a period of 2-3 days. Curing shall be started as soon as the chemical has hardened sufficiently so as not to be damaged by a fine water spray. After application of final coat, initial air drying shall be done for 2-6 hours. During this period no water is to be used for curing. In case of high temperature and low humidity combined with high wind condition, the coating shall be covered with polythene sheet to avoid rapid drying of the coating. After maximum period of 6 hours of the final application, moist curing shall be done for next 24 hours by way of spraying water on the coating. During the period at no point of time should the coating be left completely dry or submerged in water. During the first 12 hours of curing, the work shall be protected from abrasion, rain, and other adverse conditions. After moist curing, the coating shall be allowed to air dry for 3 days before submersion in water if required for use. The finished coat shall be tough, hard-wearing surface with waterproofing and shall allow trapped vapour to escape preventing

		peeling and blister formation. **Measurement / Payment** Measurement shall be in square meter of exact length and breadth. Rate shall include materials, mixing, laying, curing, finishing and labour etc., all complete.
	Integral water proofing treatment system:	Providing and applying powder or liquid waterproofing compound (Perma Trik/ Perma Plast-o-proof or equivalent) as approved by engineer as integral part of concreting system or plaster as specified by the site engineer all complete: **Mixing:-** The compound shall be mixed with cement in the ratio as specified in BOQ or as instructed by site engineer. Liquid compound: (Perma plast-o- proof or equivalent): 100 ml per 50 bags of cement) Powder form: (Perma Trik or equivalent) 500 gm per 50 kg bag of cement) The mixture shall be thoroughly mixed. Application, curing and protection shall comply with the concreting or plastering works under respective specification. Note: The installation specifications for the approved material if different, manufacturer's specification shall be followed after site engineers approval. Technical specification from manufacturer and the warranty provision/document shall be submitted before approval to the site engineer by the contractor. **Measurement / Payment** Measurement shall be as specified in BOQ . Rate shall include material and labour cost.
11. L. Maintenance and Dismantling Works		
L1, L2, L14, L15, L16	**Dismantling Masonry Works**	The Contractor shall dismantle any cement masonry works as indicated in the Drawings or as ordered by the Engineer. The resulting material shall be the property of the Employer and all suitable materials shall be stockpiled for reuse purposes within a lead of 30 m as directed by the Engineer. Unsuitable material shall be disposed off as directed by the Engineer. Cement masonry dismantling shall include use of labour and proper equipment, transporting, stockpiling and all incidental and provisions necessary to complete the work. The Contractor shall dismantle any dry stone masonry wall as indicated in the drawings or as instructed by the Engineer. The resulting material shall remain the property of the Employer and all suitable material shall be stockpiled for reuse purposes within a lead of 30 m as directed by the Engineer.
L3, L4	**Dismantling Concrete Works**	The Contractor shall dismantle any plain or reinforced concrete works as indicated in the Drawings or as ordered by the Engineer. The resulting material shall remain the property of the Employer and all suitable materials shall be stockpiled for reuse purposes within a lead of 30 meter. Unsuitable material shall be disposed off as directed by the Engineer. Concrete/reinforced concrete dismantling shall include use of labour

		and proper equipment, transporting, stockpiling and all incidental and provisions necessary to complete the work.
L17	**Wood works**	The Contractor shall dismantle any wood works as indicated in the drawings or as instructed by the Engineer. The resulting material shall remain the property of the Employer and all suitable material shall be stockpiled for reuse purposes within a lead of 30 m as directed by the Engineer.
L19	**Fence, Post, steel works**	The Contractor shall dismantle any steel works as indicated in the drawings or as instructed by the Engineer. The resulting material shall remain the property of the Employer and all suitable material shall be stockpiled for reuse purposes within a lead of 30 m as directed by the Engineer
	Crack Treatments:	Minor Crack: Providing and applying water proof mortar (Perma bond SBR mortar or equivalent.) on the RCC slab minor crack making "v" shaped groove cutting and polymer coating of 1 feet wide area from groove all complete. Major crack: Providing and filling seal (Perma poly seal or equivalent) on the RCC slab major crack with making "V" shaped groove cutting with primer coat all complete. Note: The installation specifications for the approved material if different, manufacturers' specification shall be followed after site engineer's approval. Technical specification from manufacturer and the warranty provision/document shall be submitted to the site engineer before approval by the contractor. **Measurement / Payment** Measurement shall be in running meter of exact length. Rate shall include materials, mixing, laying, curing, finishing, and labour etc., all complete
	Injection/Pressure Grouting treatment	Providing and applying pressure grouting by injection system with mixing integral waterproofing compound (Perma grout - 500, Aquafin - IB2….. or equivalent) as approved by engineer with fresh cement slurry on RCC basement slab, Water tank and RCC Shear wall area, including providing and filling Perma bond SBR modified mortar or equivalent on junction between concrete construction joint with "V" shape groove cutting including 15 mm dia pipe inserts at 1 x 1 m centre to centre as specified by the site engineer all complete: **Application:** Application shall be as per manufacturer's specification after approval by site engineer. Technical specification from manufacturer, the warranty provision and document shall be submitted to the site engineer by the contractor. Any flaws and defects shall be repaired at contractor cost and shall be submitted in clean flaw less condition. **Measurement / Payment** Measurement shall be in square meter of exact length and breadth. **Rate** Rate shall include materials, mixing, laying, curing, finishing and labour etc., all complete.
11. M. Metal, Fence and railing Works		

M1- M5,	**Fabrication of MS Members**	The Mild steel (MS) products including collapsible gates are fabricated from the Mild Steel flat, angle and channels conforming to the BS 15 or equivalent. The welding shall be butt-welding. The grips are of plastic or metal. The screws shall be steel screws. The product is primed with two coats of red lead primer. **Measurement** The work shall be measured in m² of opening in vertical plan or in unit weight as specified in the Bill of Quantity. **Payment** Payment for the work will be made on the basis of contract unit price indicated in the BOQ. The payment will be full and final compensation for all material, labour, and equipment to complete the works as specified.
M6	**Rolling Shutter**	These shall consist of MS laths 1.25mm thick and 80mm wide laths or as specified. The laths shall be machine rolled and straightened with an effective bridge depth of 16mm and shall be interlocked together throughout their entire length and jointed together at the end with end locks. These shall be mounted on specially designed pipe shaft. Each lath section shall be continuous single strip piece without any joint. The springs shall be coiled type. The spring shall be manufactured from high tensile spring steel wire or strip of adequate strength to balance the shutters in all positions. The spring pipe shaft etc. shall be supported on strong mild steel brackets. **Guide Channel** The guide channels shall be of mild steel deep channel section and of rolled, pressed or built up (fabricated) construction. The thickness of the sheet used shall not be less than 3.15mm. The minimum depths for guide channels shall be as follows: Clear width of shutter — Depth of Guide Channel. Up to 3.5m — 60mm 3.5m and above — 75mm The gap between the two legs of the guide channel shall be sufficient to allow the free movement of the curtain and at the same time - close enough to prevent the rattling of the curtain due to wind. Each guide channel shall be provided with a minimum of three fixing elates or supports for attachment to the walls or column by means of bolts or screws. The spacing of cleats shall not exceed 0.75m. Alternatively, the guide channels may also be provided with suitable dowels, hooks or pins for embedding in the walls. The guide channels shall be attached to the jambs, plumb and true, either in the overlapping fashion, projecting fashion or embedded in grooves, depending on the method of fixing. The cover of shaft, spring etc. shall be of the same material as that of lath. **Fixing** Brackets shall be fixed on the lintel or under the lintel as specified with rawl plugs, and screws bolts etc. the shaft along with the spring shall then be fixed on the brackets.

		The lath portion (shutter) shall be laid on ground and the side guide channels shall be bound with it with ropes etc. the shutter shall then be placed in position and top fixed with pipe shaft with bolts and nuts. The sides guide channels and the cover and frame shall then be fixed to the walls through the plate welded to the guides. These plates and bracket shall be fixed by means of steel screws bolts, and rawl plugs drilled in the wall. The plates and screws bolts shall be concealed in plaster to make their location invisible. Fixing shall be done accurately in a workman like manner that the operation of the shutter is easy and smooth. **Painting** All surfaces are to be painted with primer coat and minimum two coats of enamel paints as per specification, after drying and thoroughly cleaned to remove all loose scale and loose rust. Surfaces not in contact but inaccessible after shop assembling, shall receive the full-specified protective treatment before assembling. **Measurement & Rate** The measurement shall be done in height multiplied by width of the shutter, i.e. in Sqm. No extra will be paid for like shutter cover box, edges, etc. The rate shall be inclusive of labor, material, all complete.
M8	**MS Gate**	The Mild steel gates are fabricated from the Mild Steel flat, angle and channels conforming to the BS 15 or equivalent. The welding shall be butt-welding conforming relevant clause of this specification The grips are of plastic or metal. The screws shall be steel screws. The gate shall of steel sheet conforming to BS 15 or equivalent of 20G. The gate is primed with two coats of red lead primer. The gate is painted with two coat of enamel of bituminous aluminium paint to get uniform painted surfaces. **Measurement** The above work shall be measured in m² of opening in vertical plan completed as specified. **Payment** Payment for the work will be made on the basis of contract unit price indicated in the BOQ. The payment will be full and final compensation for all material, labour, and equipment to complete the works as specified.
M10, M12, M13	**Fence Works**	The barbed wire fences shall be two-strand galvanized barbed wire (Minimum of 100gm/m2) over the Mild steel wires of required diameter should be used for fencing. The Mild Steel should conform BS 15 or equivalent. The concrete in concrete post shall conform to the design drawings. **Construction Procedures** The concrete posts are erected over the foundation. The barbed wire is tightened to the post in the hooks. A tension not exceeding 400 kg/m2 is applied while erecting the wires in layers as per the design. At the end diagonal bracing shall be made. **Testing and Inspection** The erected fencing shall deform any post and wires shall be straight with out sagging. **Measurement** The above work shall be measured in m² of fence in vertical plan

		above the foundation completed as specified. **Payment** Payment for the work will be made on the basis of contract unit price indicated in the BOQ. The payment will be full and final compensation for all material, labour, and equipment to complete the works as specified.
M11	**Black Pipe Tubular Truss**	Tubes shall be designated by their nominal bore. These shall be light, medium or heavy as specified depending upon the wall thickness. Tubes shall be clean finished and reasonably free from scale. They shall be free from cracks, surface flaws, laminations and other defects. The ends shall be cut clean and square with axis of tube, unless otherwise specified. Wall thickness of tubes used for construction exposed to weather shall be not less than 4 mm and for construction not exposed to weather it shall be not less than 3.2 mm where structures are not readily accessible for maintenance, the minimum thickness shall be 5 mm. **Fabrication** The component parts of the structure shall be assembled in such a manner that they are neither twisted nor otherwise damaged and be so prepared that the specified cambers, if any, are, maintained. The tubular steel work shall be painted with one coat of approved steel primer after fabrication. All fabrication and welding is to be done in an approved workshop. ***Straightening :*** All material before being assembled shall be straightened, if necessary, unless required to be of curvilinear form and shall be free from twist. ***Bolting :*** Washers shall be specially shaped where necessary, or other means, used to give the nuts and the heads of bolts a satisfactory bearing. In all cases, where the full area of the bolts is to be developed, the threaded portion of the bolt shall not be within the thickness of the parts bolted together and washers of appropriate thickness shall be provided to allow the nuts to be completely tightened. ***Welding :*** Where welding is adopted, it shall be as specified. ***Caps and Bases for Columns :*** The ends of all the tubes, for columns transmitting loads through the ends, should be true and square to the axis of the tubes and should be provided with a cap or base accurately fitted to the end of the tube and screwed, welded or shrunk on. The cap or base plate should be true and square to the axis of the column. ***Sealing of Tubes :*** When the end of a tube is not automatically sealed by virtue of its connection be welding to another member the end shall be properly and completely sealed. Before sealing, the inside of the tubes should be dry and free from loose scale. ***Flatened Ends :*** In tubular construction the ends of tubes may be flattened or otherwise formed to provide for welded. Riveted or bolted connections provide that the methods adopted for such flattening do not injure the material. The change of sections shall be gradual. **Hoisting and Erection**

		Tubular trusses shall be hoisted and erected in position carefully, without damage to themselves, other structure, equipment and injury to workman. The method of hoisting and erection proposed to be adopted shall be got approved from the Engineer-in-charge. The contractor shall however be fully responsible, for the work being carried out in a safe and proper manner without unduly stressing the various members. Proper equipment such as derricks, lifting tackles, winches, ropes etc. shall be used. **Measurements** The work as fixed in place shall be measured in running metres correct to a centimeter on their weights calculated on the basis of standard tables correct to the nearest kilogram unless otherwise specified. Weight of cleats, brackets, packing pieces bolts nuts, washers distance pieces separators diapharam gussests, fish plates, etc. shall not be measured separately. No deduction shall be made for skew cuts. **Rate** The rate shall include the cost of labour and materials involved in all the operations described above including application of one coat of approved steel primer, i.e. red oxide zinc chrome primer.
11. N. Ceiling, Wall Panelling and Partition Works		
	General	The material for installing false ceiling system shall be made of appropriate board with flexural strength not less than 485 N cross directional and 175 N machine directional, with hardness at core, end and edge not less than 65 N, with capacity to withstand breaking load not less than 556 N in longitudinal direction and not less than 275 N in transverse direction. The thermal resistance value "R" shall be not less than 0.45, with fire propagation index "I" not less than 2.1. It shall be fixed to the underside of the suspended grid comprising properly placed at maximum distance 457mm c/c frame. Connecting clip and softie cleat using standard screw and proper metal grip, as per drawing, manufacturers' specification, and instruction of engineer, all complete. **Finish** The ceiling boards free of damages are fixed to the framing in perfect line and level. The joints are sealed with plaster of Paris and non-woven paper tapes with out forming any bubble the joints shall be finished flush to make the ceiling in one piece. The finished surface shall be smooth and true to plane and curved as required. Once laying of ceiling is completed the dust and floors are cleaned for the painting works. **Measurement** It shall be measured flat in square meter of the actual area covered. **Payment** Payment for work will be made on the basis of contract unit price indicated in the BOQ. The payment will be full and final compensation for all material, labour, and equipment to complete the works as specified.
N10 N11	**Gypsum Board**	9.5 mm-12mm thick (or as specified) Gypsum board tiles of 610 x 610 mm size (or as per design) conforming to IS 2095: 1982 & 2542-

		1981. The tiles shall be plain, textured or designed with design patterns as per drawings or approved by site engineer. The suspenders are galvanized mild steel straps of 28G and horizontal and transverse members are galvanized mild steel channel of 16 G. Construction Procedures **Frame Work** The frame work shall be of zinc coated mild steel or galvanized iron (G.I. framing) and shall consist of 45 mm sq. or 50 x50 mm square tubes of 18G as main runners as specified in the item at specified spacing welded together with 45 mm x 45 mm zinc coated Gypsteel branded channels, or 50 x 50 mm G.I. channels of 18G as runners at specified spacing. The above frame shall be suspended from existing RCC slab with adjustable 25 x 4 mm mild steel flats welded at top to reinforcement bars, including exposing the reinforcement bars and making good the damages with cement mortar as specified in the item and drawings. **Expanded Metal** Expanded metal shall be fixed with the long way of the mesh across the supports. The strands in the various sheets shall all slope in one direction, in vertical work they shall also slope inwards and downwards from the plaster face. To ensure continuity of key at the fixing points small round rods, V-shaped ribs or strips of hardwood shall be fixed on the face of the supports. All sheets shall be lapped not less that 25-mm at the sides and ends, overlaps shall not occur only at supports. Sides of the sheets shall be wired together with galvanized wire of not less than 18 SWG, at every 75 mm between supports. Cut ends of wire used for fastening etc. shall be bent inwards and not towards the plaster finishing coat. The expanded metal shall be secured to supports by means of galvanized staples at intervals of not more that 100-mm. It shall be secured to steelwork by wire or clips. The fixing centres should normally be not greater than 350 mm for mesh weighing 1.2 kg/sq.m. of 10 or 6 mm mesh. Care shall be taken to ensure that the anti corrosion treatment is in good condition after fixing. **Gypboard or Boral plaster board** The material for installing false ceiling system shall be made of gypsum board with ISO 9002 and ISO 14000 certification, with minimum thickness of 12.5mm (maximum variation in thickness +0.4mm or –0.4mm), with minimum density of 677 kg/cum, with flexural strength not less than 485 N cross directional and 175 N machine directional, with hardness at core, end and edge not less than 65 N, with capacity to withstand breaking load not less than 556 N in longitudinal direction and not less than 275 N in transverse direction. The thermal resistance value "R" shall be not less than 0.45, with fire propagation index "I" not less than 2.1. It shall be fixed to the underside of the suspended grid comprising properly galvanised 0.5mm thick 80mm x 26mm ceiling section to be placed at maximum distance 457mm c/c, 0.5mm thick 20mm x 45mm x 30mm channel

		along the wall, 0.9mm thick 15mm x 45mm intermediate channel to be placed at maximum distance of 122mm c/c, 0.5mm thick 25mm x 25mm ceiling angle to be placed at maximum distance connecting clip and 22mm x 37mm softie cleat to be fixed at RCC ceiling by using standard screw and proper metal grip, as per drawing, manufacturers' specification, and instruction of engineer, all complete. **Finish** The ceiling boards free of damages are fixed to the framing in perfect line and level. The joints are sealed with plaster of Paris and non-woven paper tapes with out forming any bubble the joints shall be finished flush to make the ceiling in one piece. The finished surface shall be smooth and true to plane and curved as required. Once laying of ceiling is completed the dust and floors are cleaned for the painting works. **Measurement** It shall be measured flat in square meter of the actual area covered. **Payment** Payment for work will be made on the basis of contract unit price indicated in the BOQ. The payment will be full and final compensation for all material, labour, and equipment to complete the works as specified.
N13	**Armstrong Board**	The Armstrong fine fissures board of size 600 x 600 x 16 mm or 600 x 1200 x 16 mm size shall be used. The Boards shall have texture and design pattern. The suspenders must conform to Armstrong standard grid. Horizontal and transverse members are galvanized mild steel channel. **Construction Procedures** The Armstrong ceilings are suspended from the concrete ceilings, and or truss and purling by steel hangers to suspend the horizontal steel channels. The horizontal members are screwed with steel screws and grip in the wall. The suspenders are clamped to the truss and purling with steel screws. After the framing is completed the engineer in charge shall check the framing before allowing fixing the ceiling boards. The Armstrong fine fissures boards free of damages are fixed to the framing in perfect line and level. Once laying of ceiling is completed the dust and floors are cleaned. **Measurement** Measurement of all the works will be made in m2 of works as specified. **Payment** Payment for work will be made on the basis of contract unit price indicated in the BOQ. The payment will be full and final compensation for all material, labor, and equipment to complete the works as specified.
N19	**Sisam wood wall panelling**	This panelling shall be decorative or non-decorative (Paintable) type as per design and thickness specified by the Engineer-in-Charge The ornamental wood work shall be painted on the back with priming coat of approved wood primer before fixing the same to the grounds with screws, which shall be sunk into the wood work and their tops covered with putty. The ornamental work shall be made true and accurate to the dimensions shown in the working drawings. The fixing

		shall be done true to lines and levels. The planks for wall lining shall be tongued and grooved, unless otherwise specified. ***Measurements*** Wall panelling shall be measured in square metre nearest to two places of decimal. ***Rate*** The rate includes the cost of materials and labour required for all the operation described above.
N20 – N23	**Prefab Panel**	Providing and fixing the prefabricated concrete panel of 50mm to 75mm thickness with tongue groove joint on metal channel with all accessories, for interior and exterior walls for dry construction. **Application:** Panels precasted as solid reinforced precast concrete (flat panels), or as reinforced concrete ribbed panels with a thin exterior shell of specified thickness as approved by the site engineer shall be used. 75 mm thick panels shall be used for the external wall and 50 mm thick panels for internal partition walls shall be used or as specified in the design. Engineering and energy performance documentation of the material shall be submitted to the site engineer for approval. Standard panels (2.4 m x 0.6 m, 2.7 m x 0.6 m, 3 m x 0.6 m) shall be laid in the metal channels as per manufacturers' specification with approval of site engineer to **Protection** Protect installed products shall be protected until completion of project. Damaged products shall be touched-up, repaired or replaced before Substantial Completion **Measurement:** It shall be done in exact square meter of the area done after deducting the openings. Rate Rate shall be for all the works including all Connections, bracing, reinforcement, labor and materials.
N24, N25	**UPVC partition board**	Refer UPVC door and windows
N26, N27	**Aluminium partition**	Refer Aluminium door and windows
11. O. Road Works / P. Gabion Works		
		Refer to Detailed Specification of relative departmental documents

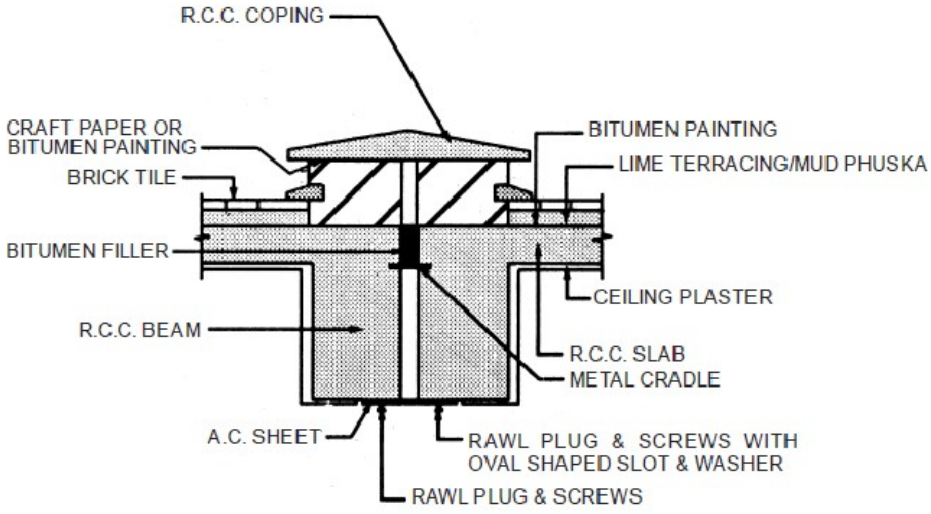

Fig. 5.11 : Details of Raised Type Expansion Joint at Roof

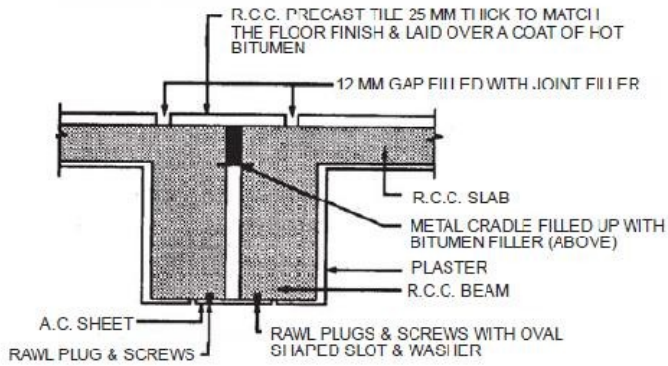

Fig. 5.12 : Typical Details of Expansion Joint at Floor

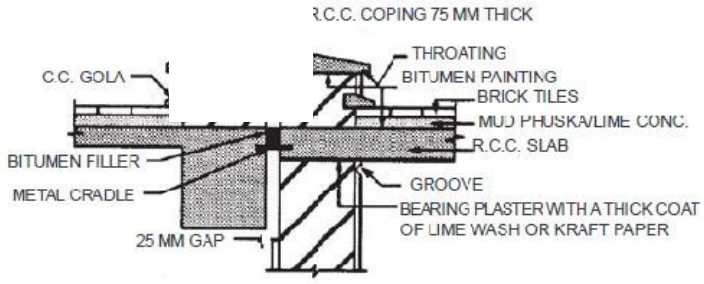

Fig. 5.13 : Typical Details of Expansion Joint at Wall & Beam Junction

LIST OF APPROVED MAKES (Example only)

Sl.No. MATERIALS	MANUFACTURERS
1. Doors & Windows fixtures/ Fittings:	Everite, Hardima, Earl Bihari
2. Door Closer / Floor spring :	Doorking, Everite, Hardwyn, Amar Darmy.
3. Aluminium Sections. :	Indal , Bhoruka, Hindalco, Jindal
4. Clear Glass/ Clear Float Glass : Toughened Glass	Modi, Gujrat Guardian, Tata, Saint Gobain(SG)
5. Laminates :	Formica, Decolam, Century, Marino, National, Green Ply
6. Synthetic Enamel Paints :	
7. Oil Bound Distemper :	
8. Cement Paint :	
9. Plastic Emulsion Paint :	
10. Other Paints/Primers :	
11. Cement : OPC 43 grade	conforming to BIS-8112 and approval of Engineer
12. Reinforcement Steel :	TMT steel conforming to BIS-1786 and approval of source by Engineer
13. Glass Mosaic Tiles :	Italia, Bizzaza. Pallidio
14. Back-up Rod. :	Supreme Industries or equivalent
15. M.S. Pipe :	Jindal Hisar, Prakash-Surya, BST, Kalinga
16. Polysulphide sealant. :	Pidilite, Fosroc, Choskey, Chematal Rai
17. Polycarbonate Sheets :	GE Plastics or approved equivalent
18. Metal Fire Check Doors :	Navair, Shakti-met, Godrej, Pacific Fire Control, Promat
19. Gyspum Board System :	India Gypsum, Laffarge, Boral
20. Sunken Portion Treatment :	Choksey, Roffe, Krytone,Sika
21. Admixtures for concrete. :	Cico, Vam Organics, Roffe, Pidilite
22. Epoxy Paint. :	
23. Ceramic Tiles :	Johnson, Somany, Kajaria, Spartek, Nitco, Orient
24. Pre-Laminated Particle Board :	Novopan, Greenlam, Kitlam,Bhutan Board.
25. Flush Door Shutters. :	Century, Kitply, Novapan, GIC Goyal, Green Ply
26. Silicon Treatment :	GE-Silicon, Pidilite, Choksey, Wacker, Forsoc
27. Glazed Tiles :	Bell, Somany, Johnson, Kajaria, Cera.
28. PVC Water Stops :	Supreme, Fixopan or approved equivalent
29. White Cement. :	Birla White, J.K.
30. Powder Coating Material Pure Polyester. :	
31. Masking Tapes :	Suncontrol , Wonder Polymer.
32. Stainless Steel Screws For Fabrication and fixing of Windows.:	Kundan , Puja , Atul.
33. Proposed Treatment on MS Brackets. :	Galvanised Brackets As per IS:4759-1996 610 gms./sqm.(microns) 80-90
34. Dash Fasteners./Anchor bolts :	Hilti, Fischer, Bosch.
35. Stainless Steel Bolts, Washers Nuts. :	Kundan, Puja, Atul.

36. Stainless Steel Pressure Plate Screws. :	Kundan, Puja, Atul.
37. Stainless Steel Friction Stay. :	Securistyle, Earl Bihari.
38. E.P.D.M. Gaskets. :	Anand Reddiplex, Enviro Seals
39. Weather Silicon. :	Dow Corning, Wacker, GE
40. Structural Silicon at butt joints :	- Do -
41. PVC continous fillet for periphery packing of Glazings /Structural glazings.:	Roop, Anand, Forex Plastic.
42. Floor Springs. :	Doorking, Opel.
43. Aluminium Cleat arrangement for Glazings. :	Deco or approved equivalent
44. Water proofing / Injection Grouting :	Overseas Water Proofing Corporation
45. 6mm thick Reflective Glass **:**	Glaverbel, Glavermas, Saint Gobain.
46. Door Locks. :	ACME, Godrej, Harrison
47. Door Seal – Woolpile Weather Strip :	Anand -Reddiplex.
48. Aluminium Grill :	Decogrille and approved Equivalent
49. Vitrified Porcelene Tiles: :	Restile (Granamite- Atena), Naveen, Bell-Ceramics, Kajaria, Somani
50. Carpets :	Hollitex, Standard, Mohawk
51. Aluminium Cladding sheets :	Alstrong , Alpolic, Alucobond,
52. Aluminium Die-cast handles : & two point locking kit	Giesse, Securistyle, Alu-alpha
53. Stainless steel D-handles :	D-line, Giesse, Dorma
54. Auditorium Chairs :	Penworker, Suri Cine chairs, Godrej
55. Woollen Fabric for Auditorium :	ESSMA, Raymonds
56. Stainless Steel Pipes/Flats :	304 Grade
57. Structural Steel :	Conforming to BIS 2062 and approval by Engineer
58. Ready Mix Concrete :	L&T,ACC,BIRLA,AHLCON
59. Antistatic Epoxy Floor :	Fosrock, Beck, Famaflor, STP
60. SBS bitumen based Self adhesive membrane Material :	Grace-Bituthene CP1.5, Texsa-Texself 1.5
61. Acoustic Mineral Fibre :	USG-Radar, Armstrong, 21st Century, Acostyle
62. APP modified Bitumen water proofing membrane :	Lloyds, STP, Bitumat
63. Hand made ceramic tiles :	Raja Tiles, Saraswathi
64. Curtain wall :	Specialised Agency to be Approved by Engineer
65. Fire Panic bar :	Briton, Monarch, Von-Duprin
66 Ply board :	Greenply, Kitply, Century
67 PVC Doors :	Rajshri or approved equivalent

<u>Note</u> : Wherever makes have not been specified for certain items, the same shall be as per National Standard and as per approval of Engineer

Drawings

Note:

1. It is customary to bind the drawings in a separate volume, which is often larger than other volumes of the contract documents. The size will be dictated by the scale of the drawings, which must not be reduced to the extent that details are reduced illegible.

2. A simplified map showing the location of the Site in relation to the local geography, indicating major roads, posts, airports, and railroads, is helpful.

3. The construction drawings, even if not fully developed, must show sufficient details to enable bidders to understand the type and complexity of the work involved and the price the Bill of Quantities.

DRAWING WILL BE PROVIDED WHEN START WORKS

Supplementary Information

SECTION - VI
Bill of Quantities[6]

Notes for Unit Rate Contracts:

Objectives

The objectives of the Bill of Quantities are

(a) to provide sufficient information on the quantities of Works to be performed to enable Bids to be prepared efficiently and accurately; and

(b) when a Contract has been entered into, to provide a priced Bill of Quantities for use in the periodic valuation of Works executed.

In order to attain these objectives, Works should be itemized in the Bill of Quantities in sufficient detail to distinguish between the different classes of Works, or between Works of the same nature carried out in different locations or in other circumstances which may give rise to different considerations of cost. Consistent with these requirements, the layout and content of the Bill of Quantities should be as simple and brief as possible.

Content

The Bill of Quantities should be divided generally into the following sections:

(a) Preamble;

(b) Work Items (grouped into parts);

(c) Day works Schedule;

d) Provisional Sums; and

(d) Summary.

Preamble

The Preamble should indicate the inclusiveness of the unit prices, and should state the methods of measurement which have been adopted in the preparation of the Bill of Quantities and which are to be used for the measurement of any part of the works.

Work Items

The items in the Bill of Quantities should be grouped into sections to distinguish between those parts of the Works which by nature, location, access, timing, or any other special characteristics may give rise to different methods of construction, or phasing of the Works, or considerations of cost. General items common to all parts of the works may be grouped as a separate section in the Bill of Quantities.

Day work Schedule

A Day work Schedule should be included only if the probability of unforeseen work, outside the items included in the Bill of Quantities, is high. To facilitate checking by the Employer of the realism of rates quoted by the Bidders, the Day work Schedule should normally comprise the following:

---

[6]In lump sum contracts, delete "Bill of Quantities" and replace with "Schedule of Activities" throughout this section.

(a) *A list of the various classes of labour, materials, and Constructional Plant for which basic day work rates or prices are to be inserted by the Bidder, together with a statement of the conditions under which the Contractor will be paid for work executed on a day work basis.*

(b) *Nominal quantities for each item of Day work, to be priced by each Bidder at Day work rates as bid. The rate to be entered by the Bidder against each basic Day work item should include the Contractor's profit, overheads, supervision, and other charges.*

Provisional Sums

A general provision for physical contingencies (quantity overruns) may be made by including a provisional sum in the Summary Bill of Quantities. Similarly, a contingency allowance for possible price increases should be provided as a provisional sum in the Summary Bill of Quantities. The inclusion of such provisional sums often facilitates budgetary approval by avoiding the need to request periodic supplementary approvals as the future need arises. Where such provisional sums or contingency allowances are used, the Contract Data should state the manner in which they will be used, and under whose authority (usually the Project Manager's).

Summary

The Summary should contain a tabulation of the separate parts of the Bill of Quantities carried forward, with provisional sums for Day work, for physical (quantity) contingencies, and for price contingencies (upward price adjustment) where applicable.

These Notes for Preparing Specifications are intended only as information for the Employer or the person drafting the Bidding documents. They should not be included in the final documents.

Preamble of Bill of Quantities

A. General

1. The Bill of Quantities shall be read in conjunction with the Instructions to Bidders, General and Special Conditions of Contract, Technical Specifications, and Drawings.

2. The quantities given in the Bill of Quantities are estimated and provisional, and are given to provide a common basis for bidding. The basis of payment will be the actual quantities of work ordered and carried out, as measured by the Contractor and verified by the Project Manager and valued at the rates and prices bid in the priced Bill of Quantities, where applicable, and otherwise at such rates and prices as the Project Manager may fix within the terms of the Contract.

3. For any item for which measurement is based on records made before or during construction the records shall be prepared and agreed between the Engineer and the Contractor. Should the Contractor carry out such work without the prior agreement of the Engineer, the Engineer may request the Contractor to carry out investigations to confirm the extent of the work and the quantity of work certified for payment shall be solely at the Engineer's discretion. The cost of any such investigation shall be borne by the Contractor.

4. The rates and prices bid in the priced Bill of Quantities shall, except as otherwise provided under the Contract, include all construction equipment, labor, supervision, materials, erection, maintenance,

insurance, profit, taxes, and duties, together with all general risks, liabilities, and obligations set out or implied in the Contract.

5. A rate or price shall be entered against each item in the priced Bill of Quantities, whether quantities are stated or not. The cost of items against which the Contractor has failed to enter a rate or price shall be deemed to be covered by other rates and prices entered in the Bill of Quantities.

6. The whole cost of complying with the provisions of the Contract shall be included in the Items provided in the priced Bill of Quantities, and where no Items are provided, the cost shall be deemed to be distributed among the rates and prices entered for the related Items of Work.

7. General directions and descriptions of work and materials are not necessarily repeated nor summarized in the Bill of Quantities. References to the relevant sections of the Contract documentation shall be made before entering prices against each item in the priced Bill of Quantities. The Specification Clause references, where given in the item description of the Bills of Quantities, are for the convenience of bidders and generally refer to the principal relevant- specification clause but do not necessarily represent the whole of the specification requirements for the work required within the item. The presence of a Specification clause reference shall not in any way reduce the Bidders obligation to complete work in accordance with all the requirements of the Specification.

8. Provisional Sums included and so designated in the Bill of Quantities shall be expended in whole or in part at the direction and discretion of the Project Manager in accordance with the Conditions of Contract.

9. The method of measurement of completed work for payment shall be in accordance with the Specifications.

10. The abbreviations and symbols used in this Bill of Quantities are: ***[Insert as applicable]***

B. Day work Schedule

a) **General**

1. Work shall not be executed on a day work basis except by written order of the Project Manager. Bidders shall enter basic rates for day work items in the Schedules. These rates shall apply to any quantity of day work ordered by the Project Manager. Nominal quantities have been indicated against each item of day work, and the extended total for day work shall, be carried forward as a Provisional Sum to the Summary Total Bid Amount. Unless otherwise adjusted, payments for day work shall be subject to price adjustment in accordance with the provisions in the Conditions of Contract.

b) Day work Labor

1. In calculating payments due to the Contractor for the execution of day works, the hours for labor will be reckoned from the time of arrival of the labor at the job site to execute the particular item of day work to the time of departure from the job site, but excluding meal breaks and rest periods. Only the time of classes of labor directly doing work ordered by the Project Manager and are competent to perform such work will be measured. The time of gangers (charge hands) actually doing work with the gangs will also be measured but not the time of foremen or other supervisory personnel.

2. The Contractor shall be entitled to payment in respect of the total time that labor is employed on day work, calculated at the basis rates entered by it in the " SCHEDULE OF DAY WORK RATES: 1. LABOR". The rates for labor shall be deemed to cover all costs to the Contractor including (but not limited to) i) the amount of wages paid to such labor, transportation time, overtime, subsistence allowances, ii) any sums paid to or on behalf of such labor for social benefits in accordance with Nepal law, iii) Contractor's profit, overheads, superintendence, liabilities and insurance and iv) charges incidental to the foregoing.

c) Day work Equipment

1. The Contractor shall be entitled to payments in respect of Constructional Plant already on site and employed on day work at the basis rental rates entered by him in the "SCHEDULE OF DAY WORK RATES:2 EQUIPMENT". The said rates shall be deemed to include due and complete allowance for depreciation, interest, indemnity and insurance, repairs, maintenance, supplies, fuel, lubricant, and other consumables and all overhead, profit and administrative costs related to the use of such equipment. The cost of drivers, operators and assistants also shall be included in the rate of the equipment and no separately payment shall be made for it.
2. In calculating the payment due to the Contractor for Constructional Plant employed on day work, only the actual number of working hours will be eligible for payment, except that where applicable and agreed with the Project Manager, the travelling time from the part of the Site where the Construction Plant was located when ordered by the Project Manager to be employed on day work and the time for return journey there to shall be included for payment.

d) Day work Materials

1. The Contractor shall be entitled to payment in respect of materials used for day work (except for materials for which the cost is included in the percentage addition to labor costs as detailed heretofore), at the rates entered by him in the "SCHEDULE OF DAY WORK RATES: 3 MATERIALS" and shall be deemed to include overhead charges and profit as follows;

   (i) the rates for materials shall be calculated on the basis of the invoiced price, freight, insurance, handling expenses, damage, losses, etc. and shall provide for delivery to store for stockpiling at the Site.

   (ii) the cost of hauling materials for use on work ordered to be carried out as day work, from the store or stockpile on the Site to the place where it is to be used also shall be include in the same rate.

Provisional Sums

The estimated cost of specialized work to be carried out, or of special goods to be supplied, by other contractors should be indicated in the relevant part of the Bill of Quantities as a particular provisional sum with an appropriate brief description. A separate procurement procedure is normally carried out by the Employer to select such specialized contractors. To provide an element of competition among the Bidders in respect of any facilities, amenities, attendance, etc., to be provided by the successful Bidder as prime Contractor for the use and convenience of the specialist contractors, each related provisional sum should be followed by an item in the Bill of Quantities inviting the Bidder to quote a sum for such amenities, facilities, attendance, etc.

Bill of Quantities

PART-III CONDITIONS OF CONTRACT AND CONTRACT FORMS

Table of Clauses

General **13**

1. Definitions 13
2. Interpretation 15
3. Language and Law 15
4.Contract Agreement 16
5. Assignment 16
6. Care and Supply of Documents 16
7. Confidential Details 16
8. Compliance with Laws 17
9. Joint and Several Liability 17
10. Project Manager's Decisions 17
11. Delegation 17
12. Communications 17
13. Subcontracting 18
14. Other Contractors 19
15 Personnel and Equipment 19
16. Employer's and Contractor's Risk 19
17. Employer's Risks 19
18. Contractor's Risks 20
19. Insurance 20
20. Site Investigation Reports 20
21. Contractor to Construct the Works 21
22. The Works to Be Completed within intended Completion Date 21
23. Design by contractor and Approval by the Project Manager 21
24. Safety, Security and Protection of the Environment 21
25. Discoveries 22
26. Possession of the Site 22
27. Access to the Site 22
28.Instructions, Inspections and Audits 22
29.Dispute Settlement 23
30. Procedures for Disputes 23

B. Staff and Labor **23**

31. Forced Labor 23
32. Child Labor 23
33.Non-discrimination and Equal Opportunity 23

B1. Time Control **23**

34. Program 23
35. Extension of the Intended Completion Date 24
36. Acceleration 25
37. Delays Ordered by the Project Manager 25
38.Management Meetings 25
39. Early Warning 25

C. Quality Control **25**

40. Identifying Defects 25
41. Tests 25
42.Correction of Defects 26
43.Uncorrected Defects 26

D. Cost Control **26**

44. Contract Price 26
45. Changes in the Contract Price 26
46. Variations 26
47.Cash Flow Forecasts 27
48.Payment Certificates 27
49. Payments 28
50.Compensation Events 28
51. Tax 29
52. Currency 29
53.Price Adjustment 29
54. Retention 31
55.Liquidated Damages 32
56. Bonus 32
57.Advance Payment 32
58. Securities 33
59. Day works 33
60. Cost of Repairs 33

F. Force Majeure **34**

61.Definition of Force Majeure 34
62. Notice of Force Majeure 34
63. Duty to Minimize Delay 35
64. Consequences of Force Majeure 35
65. Force Majeure Affecting Subcontractor 35
66.Optional Termination, Payment and Release 35
67. Release from Performance 36

G. Finishing the Contract **36**

68. Completion 36
69. Taking Over 36
70. Final Account 37
71. Operating and Maintenance Manuals 37
72. Termination 37
73.Fraud and Corruption 39
74. Black Listing 40
75. Payment upon Termination 40
76. Property 41
77.Release from Performance 41
78. Suspension of DP Loan/Credit/Grant 41
79. Eligibility 41
80.ProjectManager's Duties and Authorities 41

81.Quarries and Spoil Dumps.....42
82. Local Taxation.....42
83. Value Added Tax 42
84. Income Taxes on Staff 42
85. Duties, Taxes and Royalties.....42
86. Member of Government, etc, not Personally Liable 43
87. Approval of Use of Explosives.....43
89. Permission for Blasting 43
90.Records of Explosives.....43
91. Traffic Diversion.....43
92. Social Security Fund…….……..91

Section VII: General Conditions of Contract

SUNIL SMRITI RURAL MUNICIPALITY

Office of Rural Municipal Executive,
Sulichaur, Rolpa

Name of Contract: Building Construction of Secondary School (Ward No.05)

Contract Identification No:- SSRM-ROL-W-NCB-03-2083/084

General Conditions of Contract

This Section provides the General Conditions of Contract that will apply to the Contract for which the Biding document is issued.

General	
1. Definitions	1.1 Boldface type is used to identify defined terms. (a) The **Accepted Contract Amount** means the amount accepted in the Letter of Acceptance for the execution and completion of the Works and the remedying of any defects. (b) The **Activity Schedule** is a schedule of the activities comprising the construction, installation, testing, and commissioning of the Works in a lump sum contract. It includes a lump sum price for each activity, which is used for valuations and for assessing the effects of Variations and Compensation Events. (c) **Bill of Quantities** means the priced and completed Bill of Quantities forming part of the Bid. (d) **Compensation Events** are those defined in GCC 50 hereunder. (e) The **Completion Date** is the date of completion of the Works as certified by the Project Manager, in accordance with GCC 68.1. (f) The **Contract** is the Contract between the Employer and the Contractor to execute, complete, and maintain the Works. It consists of the documents listed in GCC 2.3 below. (g)The **Contractor** is the party whose Bid to carry out the Works has been accepted by the Employer. (h)The **Contractor's Bid** is the completed bidding document submitted by the Contractor to the Employer. (i)The **Contract Price** is the Accepted Contract Amount stated in the Letter of Acceptance and thereafter as adjusted in accordance with the Contract. (j) **Days** are calendar days; months are calendar-months. (k) **Dayworks** are varied work inputs subject to payment on a time basis for the Contractor's employees and Equipment, in addition to payments for associated Materials and Plant. (l) A **Defect** is any part of the Works not completed in accordance with the Contract. (m) The **Defects Liability Certificate** is the certificate issued by Project Manager upon correction of defects by the Contractor. (n) The **Defects Liability Period** is the period calculated from the Completion Date where the Contractor remains responsible for remedying defects.

	(o) **Drawings** include calculations and other information provided or approved by the Project Manager for the execution of the Contract. (p) The **Employer** is the party who employs the Contractor to carry out the Works, as **specified in the SCC**. (q) **Equipment** is the Contractor's machinery and vehicles brought temporarily to the Site to construct the Works. (r) **Force Majeure** means an exceptional event or circumstance: which is beyond a Party's control; which such Party could not reasonably have provided against before entering into the Contract; which, having arisen, such Party could not reasonably have avoided or overcome; and, which is not substantially attributable to the other Party. (s) The **Initial Contract Price** is the Contract Price listed in the Employer's Letter of Acceptance. (t) **In writing** or **written** means hand written, type written, printed or electronically made, and resulting in permanent record. (u) The **Intended Completion Date** is the date on which it is intended that the Contractor shall complete the Works. The Intended Completion Date is **specified in the SCC**. The Intended Completion Date may be revised only by the Project Manager by issuing an extension of time or an acceleration order. (v) **Letter of Acceptance** means the formal acceptance by the Employer of the Bid and denotes the formation of the contract at the date of acceptance. (w) **Materials** are all supplies, including consumables, used by the Contractor for incorporation in the Works. (x) **Party** means the Employer or the Contractor, as the context requires. (y) **SCC** means Special Conditions of Contract (aa) **Plant** is any integral part of the Works that shall have a mechanical, electrical, chemical, or biological function. (bb) The **Project Manager** is the person **named in the SCC** (or any other competent person appointed by the Employer and notified to the Contractor, to act in replacement of the Project Manager) who is responsible for supervising the execution of the Works and administering the Contract. (cc) **Retention Money** means the aggregate of all monies retained by the Employer pursuant to GCC 54.1. (dd) **Schedules** means the document(s) entitled schedules, completed by the Contractor and submitted with the Letter of Bids, as included in the Contract. Such document may include the Bill of Quantities, data, lists, and schedules of rates and/or prices. (ee) The **Site** is the area defined **as such in the SCC.** (ff) **Site Investigation Reports** are those that were included in the bidding documents and are factual and interpretative reports about the surface and subsurface conditions at the Site. (gg) **Specification** means the Specification of the Works included in the Contract and any modification or addition made or approved by the Project Manager.

	(hh) The **Start Date** is given i**n the SCC**. It is the latest date when the Contractor shall commence execution of the Works. It does not necessarily coincide with any of the Site Possession Dates. (ii) A **Subcontractor** is a person or corporate body who has a Contract with the Contractor to carry out a part of the work in the Contract, which includes work on the Site. (jj) **Temporary Works** are works designed, constructed, installed, and removed by the Contractor that are needed for construction or installation of the Works. (kk) A **Variation** is an instruction given by the Project Manager which varies the Works (ll) The **Works** are what the Contract requires the Contractor to construct, install, and turn over to the Employer, as **defined in the SCC**.
2. Interpretation	2.1 In interpreting these GCC, singular also means plural, male also means female or neuter, and the other way around. Headings have no significance. Words have their normal meaning under the language of the Contract unless specifically defined. The Project Manager shall provide instructions clarifying queries about these GCC.
	2.2 If sectional completion is **specified in the SCC**, references in the GCC to the Works, the Completion Date, and the Intended Completion Date apply to any Section of the Works (other than references to the Completion Date and Intended Completion Date for the whole of the Works).
	2.3 The documents forming the Contract shall be interpreted in the following order of priority: (a) Contract Agreement, (b) Letter of Acceptance, (c) Letter of Bid, (d) Special Conditions of Contract, (e) General Conditions of Contract, (f) Specifications, (g) Drawings, (h) Bill of Quantities (or Schedules of Prices for lump sum contracts), and (i) Any other document **listed in the SCC** as forming part of the Contract.
3. Language and Law	3.1 The language of the Contract and the law governing the Contract are **stated in the SCC**.
	3.2 Throughout the execution of the Contract, the Contractor shall comply with the import of goods and services prohibitions in the Employer's country when

	(a) by an act of compliance with a decision of the United Nations Security Council taken under Chapter VII of the Charter of the United Nations, the Employer's Country prohibits any import of goods from, or any payments to, a particular country, person, or entity. Where the Employer's country prohibits payments to a particular firm or for particular goods by such an act of compliance, that firm may be excluded.
4.Contract Agreement	4.1 The Parties shall enter into a Contract Agreement within 15 days after the Contractor receives the Letter of Acceptance, unless the Special Conditions establish otherwise. The Contract Agreement shall be based upon the attached Contract forms in Section IX.
	4.2 Without altering the basic nature or scope of work, the contract may be amended upon mutual written consent as per prevailing Public Procurement Law.
5. Assignment	5.1 Neither Party shall assign the whole or any part of the Contract or any benefit or interest in or under the Contract. However, either Party (a) may assign the whole or any part with the prior agreement of the other Party, at the sole discretion of such other Party; and (b) may, as security in favor of a bank or financial institution, assign its right to any moneys due, or to become due, under the Contract.
6. Care and Supply of Documents	6.1 The Specification and Drawings shall be in the custody and care of the Employer. Unless otherwise stated in the Contract, one copy of the Contract and of each subsequent Drawing shall be supplied to the Contractor, who may make or request further copies at the cost of the Contractor.
	6.2 Each of the Contractor's Documents shall be in the custody and care of the Contractor, unless and until taken over by the Employer. Unless otherwise stated in the Contract, the Contractor shall supply to the Engineer six copies of each of the Contractor's Documents.
	6.3 The Contractor shall keep, on the Site, a copy of the Contract, publications named in the Specification, the Contractor's Documents (if any), the Drawings and Variations and other communications given under the Contract. The Employer's Personnel shall have the right of access to all these documents at all reasonable times.
	6.4 If a Party becomes aware of an error or defect in a document which was prepared for use in executing the Works, the Party shall promptly give notice to the other Party of such error or defect.
7. Confidential Details	7.1 The Contractor's and the Employer's Personnel shall disclose all such confidential and other information as may be reasonably required in order to verify the Contractor's compliance with the Contract and allow its proper implementation.

	7.2 Each of them shall treat the details of the Contract as private and confidential, except to the extent necessary to carry out their respective obligations under the Contract or to comply with applicable Laws. Each of them shall not publish or disclose any particulars of the Works prepared by the other Party without the previous agreement of the other Party. However, the Contractor shall be permitted to disclose any publicly available information, or information otherwise required to establish his qualifications to compete for other projects.
	7.3 Notwithstanding the above, the Contractor may furnish to its Subcontractor(s) such documents, data and other information it receives from the Employer to the extent required for the Subcontractor(s) to perform its work under the Contract, in which event the Contractor shall obtain from such Subcontractor(s) an undertaking of confidentiality similar to that imposed on the Contractor under this Clause.
8. Compliance with Laws	8.1 The Contractor shall, in performing the Contract, comply with applicable Laws of Nepal.
9. Joint and Several Liability	9.1 If the Contractor is a joint venture of two or more entities , all such entities shall be jointly and severally liable to the Employer for the fulfillment of the provisions of the Contract, and shall designate one of such persons to act as a leader with authority to bind the joint venture. **The contractor shall not handover the responsibility of the contract to any one member or some members of Joint Venture or any other parties, not involved in the contract.** The composition or the constitution of the joint venture shall not be altered without the prior consent of the Employer.
10. Project Manager's Decisions	10.1 Except where otherwise specifically stated, the Project Manager shall decide contractual matters between the Employer and the Contractor in the role representing the Employer.
11. Delegation	11.1 The Project Manager may delegate any of his duties and responsibilities to other people after notifying the Contractor, and may cancel any delegation after notifying the Contractor.
12. Communications	12.1 Communications between parties that are referred to in the Conditions shall be effective only when in writing. Wherever these Conditions provide for the giving or issuing of approvals, certificates, consents, determinations, notices and requests, these communications shall be: (a) in writing and delivered by hand (against receipt), sent by mail or courier, or transmitted using any of the agreed systems of electronic transmission as **stated in the SCC**; and (b) delivered, sent or transmitted to the address for the recipient's communications as stated in the Contract. However: (i) if the recipient gives notice of another address, communications shall thereafter be delivered accordingly; and

	(ii) if the recipient has not stated otherwise when requesting an approval or consent, it may be sent to the address from which the request was issued. Approvals, certificates, consents and determinations shall not be unreasonably withheld or delayed.
	12.2 A Notice shall be effective when delivered or on the Notice's effective date, whichever is later.
13. Subcontracting	13.1 **For GON Funded:** A list of approved Subcontractors including its value/works is included as Article 2 (k) of contract Agreement. Approval by the Employer for any of the Subcontractors shall not relieve the Contractor from any of its obligations, duties, or responsibilities under the contract. **For DP Funded:** The Contractor may subcontract with the approval of the Project Manager, but may not assign the Contract without the approval of the Employer in writing. Subcontracting shall not alter the Contractor's obligations. Bidders may propose subcontracting up to the percentage of total value of contracts as specified in the SCC. The Sub contractor shall meet the qualification requirement as specified **in SCC.** 13.2 The contractor shall give prior notice to the Employer clearly specifying the nature, scope, and responsibilities of the work to be performed, to engage other subcontractors, material suppliers, equipment suppliers, service providers, or other persons or entities during the implementation of the contract. 13.3 Before notifying the Employer as per GCC 13.2, the contractor shall enter into a written agreement with the subcontractor, material suppliers, equipment suppliers, service providers, or other persons or entities clearly specifying the scope of work, responsibilities, quality requirements, duration, payment terms, security, labor-related obligations, and conditions relating to performance of the work. 13.3 Any subcontracting arrangement made in accordance with GCC 13.2 shall not relieve the Contractor of any of its obligations or liabilities under the Contract. 13.4 The contractor shall provide the Employer with details of the payments made to the subcontractor, material suppliers, equipment suppliers, service providers, or other persons or entities engaged under GCC 13.1 and/or GCC 13.2. 13.5 If the contractor is found not to have made payment to the subcontractor, material suppliers, equipment suppliers, service providers, or other persons or entities engaged under GCC 13.1 and/or GCC 13.2 in accordance with the terms of the agreement, the Employer may determine the amount payable to such subcontractor, material suppliers, equipment suppliers, service providers, or other persons or entities and make payment to them from any remaining

	dues to be paid to the contractor, retention money, or forfeited performance security.
14. Other Contractors	14.1 The Contractor shall cooperate and share the Site with other contractors, public authorities, utilities, and the Employer between the dates given in the Schedule of Other Contractors, **as referred to in the SCC**. The Contractor shall also provide facilities and services for them as described in the Schedule. The Employer may modify the Schedule of Other Contractors, and shall notify the Contractor of any such modification
15 Personnel and Equipment	15.1 The Contractor shall employ the key personnel and use the equipment identified in its Bid to carry out the Works, or other personnel and equipment approved by the Project Manager. The Project Manager shall approve any proposed replacement of key personnel and equipment only if their relevant qualifications or characteristics are substantially equal to or better than those proposed in the Bid.
	15.2 If the Project Manager asks the Contractor to remove a person who is a member of the Contractor's staff or work force, stating the reasons, the Contractor shall ensure that the person leaves the Site within seven days and has no further connection with the work in the Contract.
	15.3 If the Employer, Project Manager, or Contractor determines, that any employee of the Contractor be determined to have engaged in corrupt, fraudulent, collusive, coercive, or other prohibited practices during the execution of the Works, then that employee shall be removed in accordance with Clause 15.2 above.
16. Employer's and Contractor's Risk	16.1 The Employer carries the risks which this Contract states are Employer's risks, and the Contractor carries the risks which this Contract states are Contractor's risks.
17. Employer's Risks	17.1 From the Start Date until the Defects Liability Certificate has been issued, the following are Employer's risks: (a) The risk of personal injury, death, or loss of or damage to property (excluding the Works, Plant, Materials, and Equipment), which are due to (i) use or occupation of the Site by the Works or for the purpose of the Works, which is the unavoidable result of the Works or (ii) negligence, breach of statutory duty, or interference with any legal right by the Employer or by any person employed by or contracted to him except the Contractor. (b) The risk of damage to the Works, Plant, Materials, and Equipment to the extent that it is due to a fault of the Employer or in the Employer's design, or due to war or radioactive contamination directly affecting the

	country where the Works are to be executed.
	17.2 From the Completion Date until the Defects Liability Certificate has been issued, the risk of loss of or damage to the Works, Plant, and Materials is an Employer's risk except loss or damage due to (a) a Defect which existed on the Completion Date, (b) an event occurring before the Completion Date, which was not itself an Employer's risk, or (c) the activities of the Contractor on the Site after the Completion Date.
18. Contractor's Risks	18.1 From the Starting Date until the Defects Liability Certificate has been issued, the risks of personal injury, death, and loss of or damage to property (including, without limitation, the Works, Plant, Materials, and Equipment) which are not Employer's risks are Contractor's risks.
19. Insurance	19.1 The Contractor shall provide insurance in the joint names of the Employer and the Contractor from the Start Date to the end of the Defects Liability Period, in the amounts and deductibles **stated in the SCC** for the following events which are due to the Contractor's risks: (a) loss of or damage to the Works, Plant, and Materials; (b) loss of or damage to Equipment; (c) loss of or damage to property (except the Works, Plant, Materials, and Equipment) in connection with the Contract; and (d) Personal injury or death.
	19.2 Policies and certificates for insurance shall be delivered by the Contractor to the Project Manager for the Project Manager's approval before the Start Date. All such insurance shall provide for compensation to be payable in the proportions of Nepalese Rupees required to rectify the loss or damage incurred.
	19.3 If the Contractor does not provide any of the policies and certificates required, the Employer may affect the insurance which the Contractor should have provided and recover the premiums the Employer has paid from payments otherwise due to the Contractor or, if no payment is due, the payment of the premiums shall be a debt due.
	19.4 Alterations to the terms of insurance shall not be made without the approval of the Project Manager.
	19.5 Both parties shall comply with any conditions of the insurance policies.
20. Site Investigation	20.1 The Contractor, in preparing the Bid, shall rely on any Site Investigation Reports referred to **in the SCC**, supplemented by any information available to the

Reports	Contractor.
21. Contractor to Construct the Works	21.1 The Contractor shall construct and install the Works in accordance with the Specifications and Drawings.
22. The Works to Be Completed within intended Completion Date	22.1 The Contractor may commence execution of the Works on the Start Date and shall carry out the Works in accordance with the Program submitted by the Contractor, as updated with the approval of the Project Manager, and complete them within the intended Completion Date.
23. Design by contractor and Approval by the Project Manager	23.1 The contractor shall be responsible for the design of permanent works as **specified in SCC**.
	23.2 Contractor shall be responsible for design of the Temporary Works. The Contractor shall submit Specifications and Drawings showing the proposed Temporary Works to the Project Manager, for his approval.
	23.3 All Drawings prepared by the Contractor for the execution of the temporary or permanent Works, shall be subject to prior approval by the Project Manager before their use.
	23.4 The Project Manager's approval shall not alter the Contractor's responsibility for design of temporary works.
24. Safety, Security and Protection of the Environment	24.1 The Contractor shall, throughout the execution, and completion of the works and remedying of any defects therein: a. Have full regard for the safety of all persons entitled to be upon the site and keep the site (so as the same is under his control) and the works (so far as the same are not completed or occupied by the Employer) in an orderly state appropriate to the avoidance of danger to such persons. b. Provide and maintain at his own cost all lights, guards, fencing, warning signs and watching, when necessary or required by the Project Manager or by any duly constituted authority, for the protection of the Works of for the safety and convenience of the public or others. c. Take all reasonable steps to protect the environment on and off the site and to avoid damage or nuisance to persons or to property of the public or others resulting from pollution, noise or other causes arising as a consequence of his methods of operation. d. Ensure that any cut or fill slopes are planted in grass or other plant cover as soon

	as possible to protect them from erosion. e. Any spoil or material removed from drains shall be disposed of to designated stable tipping areas as directed by the Project Manager. f. Shall not use fuel wood as a means of heating during the processing or preparation of any materials forming part of the works. g. The Project Manager shall have the power to disallow any working practice or activity of the Contractor or direct that such practices or activities be modified should the Project Manager consider, on the advice of the relevant Government Departments, that the practices or activities will be harmful to wildlife. h. Provide on the Site such lifesaving apparatus as may be appropriate and an adequate and easily accessible first aid outfit or such outfits as may be required by any government ordinance, factory act, etc., subsequently published and amended from time to time.
	24.2 The Contractor shall comply with the Employer's Occupational Health and Safety (OHS) Policy, Guideline and/or Operating Manual, if any, **as specified in the SCC.**
25. Discoveries	25.1 Anything of historical or other interest or of significant value unexpectedly discovered on the Site shall be the property of the employer. The Contractor shall notify the Project Manager of such discoveries and carry out the Project Manager's instructions for dealing with them.
26. Possession of the Site	26.1 The Employer shall give possession of all parts of the Site to the Contractor. If possession of a part is not given by the date **stated in the SCC**, the Employer shall be deemed to have delayed the start of the relevant activities, and this shall be a Compensation Event.
27. Access to the Site	27.1 The Contractor shall allow the Project Manager and any person authorized by the Project Manager access to the Site and to any place where work in connection with the Contract is being carried out or is intended to be carried out.
28.Instructions, Inspections and Audits	28.1 The Contractor shall carry out all instructions of the Project Manager which comply with the applicable laws where the Site is located.
	28.2 The Contractor shall keep, and shall make all reasonable efforts to cause its Subcontractors and sub consultants to keep accurate and systematic accounts and records in respect of the Works in such form and details as will clearly identify relevant time changes and costs.
	28.3 The Contractor shall permit the GoN/DP and/or persons appointed by the GoN/DP to inspect the Site and/or the accounts and records of the Contractor and its sub-contractors relating to the performance of the Contract, and to have such accounts and records audited by auditors appointed by the GoN/DP if required by the GoN/DP. The Contractor's attention is drawn to Sub-Clause 73.2 which provides, inter alia, that acts intended to materially impede the exercise of the

	GoN's/DP's inspection and audit rights provided for under this Sub-Clause constitute a obstructive practice subject to contract termination.
29.Dispute Settlement	29.1 The Employer and the Contractor shall attempt to settle amicably by direct negotiation any disagreement or dispute arising between them under or in connection with the Contract.
	29.2 Any dispute between the Parties as to matters arising pursuant to this Contract which cannot be settled amicably within thirty (30) days after receipt by one Party of the other Party's request for such amicable settlement may be referred to Arbitration within 30 days after the expiration of amicable settlement period.
30. Procedures for Disputes	30.1 In case of arbitration, the arbitration shall be conducted in accordance with procedures in accordance with law of Nepal at the place **given in the SCC**.
B. Staff and Labor	
31. Forced Labor	31.1 The Contractor shall not employ forced labor, which consists of any work or service, not voluntarily performed, that is exacted from an individual under threat of force or penalty. This covers any kind of involuntary or compulsory labor, such as indentured labor, bonded labor, or similar labor–contracting arrangements.
32. Child Labor	32.1 The Contractor shall not employ children in a manner that is economically exploitative, or is likely to be hazardous, or to interfere with, the child's education, or to be harmful to the child's health or physical, mental, spiritual, moral, or social development. Where national laws have provisions for employment of minors, the Contractor shall follow those laws applicable to the Contractor. Children below the age of 18 years shall not be employed in dangerous work.
33.Non-discrimination and Equal Opportunity	33.1 The Contractor shall not make employment decisions on the basis of personal characteristics unrelated to inherent job requirements. The Contractor shall base the employment relationship on the principle of equal opportunity and fair treatment, and shall not discriminate with respect to aspects of the employment relationship, including recruitment and hiring, compensation (including wages and benefits), working conditions and terms of employment, access to training, promotion, termination of employment or retirement, and discipline. In countries where national law provides for non-discrimination in employment, the Contractor shall comply with national law. When national laws are silent on nondiscrimination in employment, the Contractor shall meet this Sub clause's requirements. Special measures of protection or assistance to remedy past discrimination or selection for a particular job based on the inherent requirements of the job shall not be deemed discrimination.
B1. Time Control	
34. Program	34.1 Within the time **stated in the SCC**, after the date of the Letter of Acceptance, the Contractor shall submit to the Project Manager for approval a Program showing the general methods, arrangements, order, and timing for all the activities in the Works. In the case of a lump sum contract, the activities in the Program shall be

	consistent with those in the Activity Schedule.
	34.2 An update of the Program shall be a program showing the actual progress achieved on each activity and the effect of the progress achieved on the timing of the remaining work, including any changes to the sequence of the activities.
	34.3 The Contractor shall submit to the Project Manager for approval an updated Program at intervals no longer than the period **stated in the SCC**. If the Contractor does not submit an updated Program within this period, the Project Manager may withhold the amount stated in the SCC from the next payment certificate and continue to withhold this amount until the next payment after the date on which the overdue Program has been submitted. In the case of a lump sum contract, the Contractor shall Provide an updated Activity Schedule within 15 days of being instructed to by the Project Manager.
	34.4 The Project Manager's approval of the Program shall not alter the Contractor's obligations. The Contractor may revise the Program and submit it to the Project Manager again at any time. A revised Program shall show the effect of Variations and Compensation Events.
35. Extension of the Intended Completion Date	35.1 The Project Manager shall extend the Intended Completion Date if a Compensation Event occurs or a Variation is issued which makes it impossible for Completion to be achieved by the Intended Completion Date without the Contractor taking steps to accelerate the remaining work, which would cause the Contractor to incur additional cost.
	35.2 The Project Manager shall decide whether and by how much to extend the Intended Completion Date within 21 days of the Contractor asking the Project Manager for a decision upon the effect of a Compensation Event or Variation and submitting full supporting information at least 21 days prior to the intended completion date. If the Contractor has failed to give early warning of a delay or has failed to cooperate in dealing with a delay, the delay by this failure shall not be considered in assessing the new Intended Completion Date. Along with full supporting information, the contractor shall also submit a revised work schedule and ensure that the Performance Security, Insurance, and Advance Payment Security remain valid. Within fifteen (15) days of the receipt of Letter of Extension of Intended Completion Date from the Employer, the contractor shall submit Performance Security, Advanced Payment Guarantee (if any) and Insurance Policy documents as required with extended validity.
	35.3 If the contractor fails to submit Performance Security, Advanced Payment Guarantee (if any) and Insurance Policy documents, as required with extended validity within the prescribed time as per ITB 35.2, the Contractor shall pay fine at the rate of 0.01% of the final contract price (without VAT but including PS) per day for a maximum of fifteen (15) days. The Employer may deduct the fine from payments due to the Contractor.

36. Acceleration	36.1 When the Employer wants the Contractor to finish before the Intended Completion Date, the Project Manager shall obtain priced proposals for achieving the necessary acceleration from the Contractor. If the Employer accepts these proposals, the Intended Completion Date shall be adjusted accordingly and confirmed by both the Employer and the Contractor.
	36.2 If the Contractor's priced proposals for acceleration are accepted by the Employer, they are incorporated in the Contract Price and treated as a Variation.
37. Delays Ordered by the Project Manager	37.1 The Project Manager may instruct the Contractor to delay the start or progress of any activity within the Works.
38.Management Meetings	38.1 Either the Project Manager or the Contractor may require the other to attend a management meeting. The business of a management meeting shall be to review the plans for remaining work and to deal with matters raised in accordance with the early warning procedure.
	38.2 The Project Manager shall record the business of management meetings and provide copies of the record to those attending the meeting and to the Employer. The responsibility of the parties for actions to be taken shall be decided by the Project Manager either at the management meeting or after the management meeting and stated in writing to all who attended the meeting.
39. Early Warning	39.1 The Contractor shall warn the Project Manager at the earliest opportunity of specific likely future events or circumstances that may adversely affect the quality of the work, increase the Contract Price, or delay the execution of the Works. The Project Manager may require the Contractor to provide an estimate of the expected effect of the future event or circumstance on the Contract Price and Completion Date. The estimate shall be provided by the Contractor as soon as reasonably possible.
	39.2 The Contractor shall cooperate with the Project Manager in making and considering proposals for how the effect of such an event or circumstance can be avoided or reduced by anyone involved in the work and in carrying out any resulting instruction of the Project Manager.
C. Quality Control	
40. Identifying Defects	40.1 The Project Manager shall check the Contractor's work and notify the Contractor of any Defects that are found. Such checking shall not affect the Contractor's responsibilities. The Project Manager may instruct the Contractor to search for a Defect and to uncover and test any work that the Project Manager considers may have a Defect.
41. Tests	41.1 If the Project Manager instructs the Contractor to carry out a test not specified in the Specification to check whether any work has a Defect and the test shows that it

	does, the Contractor shall pay for the test and any samples. If there is no Defect, the test shall be a Compensation Event.
42.Correction of Defects	42.1 The Project Manager shall give notice to the Contractor of any Defects before the end of the Defects Liability Period, which begins at issuance of taking over certificate pursuant to GCC clause 69.2, and is **defined in the SCC**. The Defects Liability Period shall be extended for as long as Defects remain to be corrected.
	42.2 Every time notice of a Defect is given, the Contractor shall correct the notified Defect within the length of time specified by the Project Manager's notice.
43.Uncorrected Defects	43.1 If the Contractor has not corrected a Defect within the time specified in the Project Manager's notice, the Project Manager shall assess the cost of having the Defect corrected, and the Contractor shall pay this amount.
D. Cost Control	
44. Contract Price	44.1 In the case of a Unit Rate contract, the Bill of Quantities shall contain priced items for the Works to be performed by the Contractor. The Bill of Quantities is used to calculate the Contract Price. The Contractor will be paid for the quantity of the work accomplished at the rate in the Bill of Quantities for each item.
	44.2 In the case of a lump sum contract, the Activity Schedule shall contain the priced activities for the Works to be performed by the Contractor. The Activity Schedule is used to monitor and control the performance of activities on which basis the Contractor will be paid. If payment for Materials on Site shall be made separately, the Contractor shall show delivery of Materials to the Site separately on the Activity Schedule.
45. Changes in the Contract Price	45.1 In the case of an Unit Rate contract: (a) If the final quantity of the work done differs from the quantity in the Bill of Quantities for the particular item by more than 25 percent, provided the change exceeds 2 percent of the Initial Contract Price, the Project Manager shall adjust the rate to allow for the change. (b) If requested by the Project Manager, the Contractor shall provide the Project Manager with a detailed cost breakdown of any rate in the Bill of Quantities.
	45.2 In the case of a lump sum contract, the Activity Schedule shall be amended by the Contractor to accommodate changes of Program or method of working made at the Contractor's own discretion. Prices in the Activity Schedule shall not be altered when the Contractor makes such changes to the Activity Schedule.
46. Variations	46.1 All Variations shall be included in updated Programs, and, in the case of a lump sum contract, also in the Activity Schedule, produced by the Contractor.
	46.2 The Contractor shall provide the Project Manager with a quotation for carrying out the Variation when requested to do so by the Project Manager. The Project Manager shall assess the quotation, which shall be given within seven (7)

	days of the request or within any longer period stated by the Project Manager and before the Variation is ordered.
	46.3 If the Contractor's quotation is unreasonable, the Project Manager may order the Variation and make a change to the Contract Price, which shall be based on the Project Manager's own forecast of the effects of the Variation on the Contractor's costs.
	46.4 If the Project Manager decides that the urgency of varying the work would prevent a quotation being given and considered without delaying the work, no quotation shall be given and the Variation shall be treated as a Compensation Event.
	46.5 The Contractor shall not be entitled to additional payment for costs that could have been avoided by giving early warning.
	46.6 In the case of an Unit Rate contract, if the work in the Variation corresponds to an item description in the Bill of Quantities and if, in the opinion of the Project Manager, the quantity of work above the limit stated in **GCC 45.1** or the timing of its execution do not cause the cost per unit of quantity to change, the rate in the Bill of Quantities shall be used to calculate the value of the Variation. If the cost per unit of quantity changes, or if the nature or timing of the work in the Variation does not correspond with items in the Bill of Quantities, the quotation by the Contractor shall be in the form of new rates for the relevant items of work.
47.Cash Flow Forecasts	47.1 When the Program, or, in the case of a lump sum contract, the Activity Schedule, is updated, the Contractor shall provide the Project Manager with an updated cash flow forecast.
48.Payment Certificates	48.1 The Contractor shall submit to the Project Manager monthly statements of the estimated value of the work executed less the cumulative amount certified previously.
	48.2 The Project Manager shall check the Contractor's monthly statement and certify the amount to be paid to the Contractor within 30 days of submission by contractor.
	48.3 The value of work executed shall be determined by the Project Manager.
	48.4 The value of work executed shall comprise: (a) In the case of an Unit Rate contract, the value of the quantities of work in the Bill of Quantities that have been completed; or (b) In the case of a lump sum contract, the value of work executed shall comprise the value of completed activities in the Activity Schedule.
	48.5 The value of work executed shall include the valuation of Variations and Compensation Events.

	48.6 The Project Manager may exclude any item certified in a previous certificate or reduce the proportion of any item previously certified in any certificate in the light of later information.
49. Payments	49.1 Payments shall be adjusted for deductions for advance payments and retention. The Employer shall pay the Contractor the amounts certified by the Project Manager within 30 days of the date of each certificate. If the Employer makes a late payment, the Contractor shall be paid interest as **indicated in the SCC** on the late payment in the next payment. Interest shall be calculated from the date by which the payment should have been made up to the date when the late payment is made.
	49.2 If an amount certified is increased in a later certificate or as a result of an award by an Arbitrator, the Contractor shall be paid interest upon the delayed payment as set out in this clause. Interest shall be calculated from the date upon which the increased amount would have been certified in the absence of dispute.
	49.3 Items of the Works for which no rate or price has been entered in BOQ shall not be paid for by the Employer and shall be deemed covered by other rates and prices in the Contract.
50.Compensation Events	50.1 The following shall be Compensation Events: (a) The Employer does not give access to a part of the Site by the Site Possession Date pursuant to GCC 26.1. (b) The Employer modifies the Schedule of Other Contractors in a way that affects the work of the Contractor under the Contract. (c) The Project Manager orders a delay or does not issue Drawings, Specifications, or instructions required for execution of the Works on time. (d) The Project Manager instructs the Contractor to uncover or to carry out additional tests upon work, which is then found to have no Defects. (e) The Project Manager unreasonably does not approve a subcontract to be let. (f) Ground conditions are substantially more adverse than could reasonably have been assumed before issuance of the Letter of Acceptance from the information issued to bidders (including the Site Investigation Reports), from information available publicly and from a visual inspection of the Site. (g) The Project Manager gives an instruction for dealing with an unforeseen condition, caused by the Employer, or additional work required for safety or other reasons. (h) Other contractors, public authorities, utilities, or the Employer does not work within the dates and other constraints stated in the Contract, and they cause delay or extra cost to the Contractor. (i) The advance payment is delayed.

	(j) The effects on the Contractor of any of the Employer's Risks. (k) The Project Manager unreasonably delays issuing a Certificate of Completion.
	50.2 If a Compensation Event would cause additional cost or would prevent the work being completed before the Intended Completion Date, the Contract Price shall be increased and/or the Intended Completion Date shall be extended. The Project Manager shall decide whether and by how much the Contract Price shall be increased and whether and by how much the Intended Completion Date shall be extended.
	50.3 As soon as information demonstrating effect of each Compensation Event upon the Contractor's forecast cost has been provided by the Contractor, it shall be assessed by the Project Manager, and the Contract Price shall be adjusted accordingly. If the Contractor's forecast is deemed unreasonable, the Project Manager shall adjust the Contract Price based on the Project Manager's own forecast. The Project Manager shall assume that the Contractor shall react competently and promptly to the event.
	50.4 The Contractor shall not be entitled to compensation to the extent that the Employer's interests are adversely affected by the Contractor's not having given early warning or not having cooperated with the Project Manager.
51. Tax	51.1 The Project Manager shall adjust the Contract Price if taxes, duties, and other levies are changed between the date 30 days before the submission of bids for the Contract and the date of the last Completion certificate. The adjustment shall be the change in the amount of tax payable by the Contractor, provided such changes are not already reflected in the Contract Price or are a result of GCC 53.
52. Currency	52.1 The currency of Contracts shall be Nepalese Rupees.
53.Price Adjustment	53.1 Prices shall be adjusted for fluctuations in the cost of inputs only if **provided for in the SCC**. If so provided, the amounts certified in each payment certificate, before deducting for Advance Payment, shall be adjusted by applying the respective price adjustment factor to the payment amounts due.
	53.2 Adjustment Formulae[7]: The formulae will be of the following general type: $pn = A + b\frac{Ln}{Lo} + c\frac{Mn}{Mo} + d\frac{En}{Eo} + etc.$ Where: *pn* is a price adjustment factor to be applied to the amount for the payment of

[7] For complex Works involving several types of construction work with different inputs, a family of Formulae will be necessary. The various items of Day work may also require different formulae, depending on the nature and source of the inputs

	the work carried out in the subject month, determined in accordance with Clause 49; *A* is a constant, specified in the Bidding Forms- Table of Price Adjustment data, representing the nonadjustable portion in contractual payments;[8]b, c, d, etc., coefficients representing the estimated proportion of each cost element (labor, materials, equipment usage, etc.) in the Works or sections thereof, net of Provisional Sums, **as specified in the SCC;** *Ln, Mn, En,* etc., are the current cost indices or reference prices of the cost elements for month "n," determined pursuant to Sub-Clause 53.4, applicable to each cost element; and *Lo, Mo, Eo,* etc., are the base cost indices or reference prices corresponding to the above cost elements at the date specified in Sub-Clause 53.4
	53.3 Sources of Indices and Weightings: The sources of indices shall be those listed in the Bidding Forms- Table of Price Adjustment data, as approved by the Project Manager and stated in SCC. Indices shall be appropriate for their purpose and shall relate to the Contractor's proposed source of supply of inputs on the basis of which his Contract shall have been computed. As the proposed basis for price adjustment, the Contractor shall have submitted with his bid the tabulation of Weightings and Source of Indices in the Bidding Forms, which shall be subject to approval by the Project Manager.
	53.4 Base, Current and Provisional Indices: The base cost indices or prices shall be those prevailing on the day 30 days prior to the latest date for submission of bids. Current indices or prices shall be those prevailing on the day 30 days prior to the last day of the period to which a particular Interim Payment Certificate is related. If at any time the current indices are not available, provisional indices as determined by the Project Manager will be used, subject to subsequent correction of the amounts paid to the Contractor when the current indices become available.
	53.5 Weightings: The weightings for each of the factors of cost given in the Bidding Forms shall be adjusted if, in the opinion of the Project Manager, they have been rendered unreasonable, unbalanced or inapplicable as a result of varied or additional work already executed or instructed under Clause 46 or for any other reason.
	53.6 Where, price adjustment provision is not applicable pursuant to Sub-clause 53.1 then the Contract is subject to price adjustment only for construction material in accordance with this clause. If the prices of the construction materials stated in the contract is increased or decreased in an unexpected manner in excess of ten (10%) percent in comparison to the base price construction material stated

[8] Insert a figure for factor A only where there is a part of the Contractors' expenditures which will not be subject to fluctuation in cost or to compensate for the unreliability of some indices. A should normally be 0.15. The sum of A, b, c, d, etc., should be one.

	in Section –IV, Bidding Forms-Table of Price Adjustment Data, then the price adjustment for the increase or decrease of price of the construction material beyond 10% shall be made by applying the following formulas: For unexpected increase in price $P = [R_1 - (R_0 \times 1.10)] \times Q$ For unexpected decrease in price P $= [R_1 - (R_0 \times 0.90)] \times Q$ Where: "P" is price adjustment amount "R_1" is the present price of the construction material (Source of indices shall be those listed in the Bidding forms) "R_0" is the base price of the construction material "Q" is quantity of the construction material consumed in construction during the period of price adjustment consideration If the Base price and source is to be proposed by the Bidder as per the provision made in Section –IV, Bidding Forms-Table of Price Adjustment Data then the Base price and source filled by Bidder for the construction material stated in the Bidding Form shall be subject to the approval of the Project manager and shall be as **stated in SCC**..
	53.7 The Price Adjustment amount shall be limited to a maximum of the initial Contract Amount **as specified in the SCC**.
	53.8 The Price Adjustment provision shall not be applicable for delayed period if the contract is not completed in time due to the delay caused by the contractor or the contract is a Lump sum Contract.
54. Retention	54.1 The Employer shall retain from each payment due to theContractor the proportion **stated in the SCC** until Completion of the whole of the Works.
	54.2 Upon the issue of a Defects Liability Certificate by the Project Manager, in accordance with GCC 70.1, half the total amount retained shall be repaid to the Contractor and half when the Contractor has submitted the evidence of submission of tax return to the concerned Internal Revenue Office.
	54.3 The Contractor may substitute retention money with an unconditional bank guarantee issued from Commercial Bank or Financial Institution eligible to issue Bank Guarantee as per prevailing Law if: (a) at least eighty (80) percent of the whole works have been completed, (b) progress of the works is satisfactory in accordance with the Contract as per approved work schedule, and

	(c) it can be assured that the works can be completed at the intended completion date. The validity of the bank guarantee under this sub-clause shall be at least 30 days beyond the end of Defect Liability Period.
	54.4 If retention money is substituted by bank guarantee in accordance with clause 54.3, the bank guarantee shall be submitted either using the Retention Money Security Form included in Section X (Contract Forms) or in another Form acceptable to the employer. The validity of the bank guarantee shall be at least one month more than the end of defect liability period.
55.Liquidated Damages	55.1 The Contractor shall pay liquidated damages to the Employer at the rate per day **stated in the SCC** for each day that the Completion Date is later than the Intended Completion Date. The total amount of liquidated damages shall not exceed the amount **defined in the SCC**. The Employer may deduct liquidated damages from payments due to the Contractor. Payment of liquidated damages shall not affect the Contractor's liabilities.
	55.2 If the Intended Completion Date is extended after liquidated damages have been paid, the Project Manager shall correct any overpayment of liquidated damages by the Contractor by adjusting the next payment certificate. The Contractor shall be paid interest on the overpayment, calculated from the date of payment to the date of repayment, at the rates specified in GCC 49.
56. Bonus	56.1 The Contractor shall be paid a Bonus calculated at the rate per calendar day **stated in the SCC** for each day (less any days for which the Contractor is paid for acceleration) that the Completion is earlier than the Intended Completion Date. The Project Manager shall certify that the Works are complete, although they may not be due to be complete.
57.Advance Payment	57.1 Unless otherwise **stated in SCC,** the Employer shall make advance payment to the Contractor of the amounts stated in the SCC, in two equal installments by the date **stated in the SCC**, against provision by the Contractor of an unconditional bank guarantee from Commercial Bank or Financial Institution eligible to issue Bank Guarantee as per prevailing Law in a form acceptable to the Employer in amounts equal to the advance payment. The guarantee shall remain effective until the advance payment has been repaid, but the amount of the guarantee shall be progressively reduced by the amounts repaid by the Contractor. Interest shall not be charged on the advance payment. The validity of the bank guarantee under this sub-clause shall be at least 30 days beyond the end of intended completion date. The contractor shall submit the list of activities for which the Advance Payment for mobilization to be used along with their time schedules.

	57.2 The Contractor is to use the advance payment only to pay for the purpose of construction site preparation, establishment of temporary camp facilities, construction of workers' housing, mobilization of labors, materials or equipment etc required specifically for execution of the Contract. The Contractor shall demonstrate that advance payment has been used in this way by supplying copies of invoices or other documents to the Project Manager.
	57.3 The advance payment shall be repaid by deducting proportionate amounts, **as stated in SCC**, from payments otherwise due Contractor, following the schedule of completed percentages of the Works on a payment basis. No account shall be taken of the advance payment or its repayment in assessing valuations of work done, Variations, price adjustments, Compensation Events, Bonuses, or Liquidated Damages.
	57.4 If the advance provided under GCC 57.1 is not repaid due to non-performance of the works under the contract, by the contractor within the time period specified in the contract, the Employer shall recover the advance by enforcing the bank guarantee as provided under GCC 57.1, and shall also recover interest on the advance amount from the contractor at a rate **stated in SCC.**
58. Securities	58.1 The Performance Security, including any additional security required as per ITB 29.5, shall be provided to the Employer no later than the date specified in the Letter of Acceptance and shall be issued in an amount **specified in the SCC,** by a Commercial Bank or Financial Institution eligible to issue Bank Guarantee as per prevailing Law in Nepal in accordance with the conditions of Contract using Sample Form for the Performance Security included in Section IX (Contract Forms), or another form acceptable to the Employer, and denominated in Nepalese Rupees. The Performance Security shall be valid until a date 30 days beyond the end of the Defect Liability Period. Any additional performance security required as per ITB 29.5 shall be valid until a date 30 days beyond the end of the intended completion date.
	58.2 The performance security issued by any foreign Bank outside Nepal must be counter guaranteed by a Commercial Bank or Financial Institution eligible to issue Bank Guarantee as per prevailing Law in Nepal.
59. Day works	59.1 If applicable, the Day works rates in the Contractor's Bid shall be used for small additional amounts of work only when the Project Manager has given written instructions in advance for additional work to be paid for in that way.
	59.2 All work to be paid for as Day works shall be recorded by the Contractor on forms approved by the Project Manager. Each completed form shall be verified and signed by the Project Manager within two days of the work being done.
	59.3 The Contractor shall be paid for Day works subject to obtaining signed Day works forms.
60. Cost of Repairs	60.1 Loss or damage to the Works or Materials to be incorporated in the Works between the Start Date and the end of the Defects Correction periods shall be

	remedied by the Contractor at the Contractor's cost if the loss or damage arises from the Contractor's acts or omissions.
F. Force Majeure	
61.Definition of Force Majeure	61.1 In this Clause, "Force Majeure" means an exceptional event or circumstance, (a) which is beyond a Party's control; (b) which such Party could not reasonably have provided against before entering into the Contract; (c) which, having arisen, such Party could not reasonably have avoided or overcome; and (d) which is not substantially attributable to the other Party.
	61.2 Force Majeure may include, but is not limited to, exceptional events or circumstances of the kind listed below, so long as conditions (a) to (d) above are satisfied: (a) war, hostilities (whether war be declared or not), invasion, act of foreign enemies; (b) rebellion, terrorism, sabotage by persons other than the Contractor's Personnel, revolution, insurrection, military or usurped power, or civil war; (c) riot, commotion, disorder, strike or lockout by persons other than the Contractor's Personnel; (d) munitions of war, explosive materials, ionizing radiation or contamination by radio-activity, except as may be attributable to the Contractor's use of such munitions, explosives, radiation or radio-activity; and (e) natural catastrophes such as earthquake, hurricane, typhoon or volcanic activity.
62. Notice of Force Majeure	62.1 If a Party is or will be prevented from performing its substantial obligations under the Contract by Force Majeure, then it shall give notice to the other Party of the event or circumstances constituting the Force Majeure and shall specify the obligations, the performance of which is or will be prevented. The notice shall be given within 14 days after the Party became aware, or should have become aware, of the relevant event or circumstance constituting Force Majeure.
	62.2 The Party shall, having given notice, be excused performance of its obligations for so long as such Force Majeure prevents it from performing them.
	62.3 Notwithstanding any other provision of this Clause, Force Majeure shall not apply to obligations of either Party to make payments to the other Party under the Contract.

63. Duty to Minimize Delay	63.1 Each Party shall at all times use all reasonable endeavors to minimize any delay in the performance of the Contract as a result of Force Majeure.
	63.2 A Party shall give notice to the other Party when it ceases to be affected by the Force Majeure.
64. Consequences of Force Majeure	64.1 If the Contractor is prevented from performing its substantial obligations under the Contract by Force Majeure of which notice has been given under GCC 62, and suffers delay and/or incurs Cost by reason of such Force Majeure, the Contractor shall be entitled subject to GCC 30 to (a) an extension of time for any such delay, if completion is or will be delayed, under GCC35 ; and (b) if the event or circumstance is of the kind described in sub-paragraphs (a) to (d) of GCC 61.2 and, in the case of subparagraphs (b) to (d), occurs in the Country, payment of any such Cost, including the costs of rectifying or replacing the Works and/or Goods damaged or destructed by Force Majeure, to the extent they are not indemnified through the insurance policy referred to in GCC 19.
	64.2 After receiving this notice, the Project Manager shall proceed in accordance with GCC 10 to agree or determine these matters.
65. Force Majeure Affecting Subcontractor	65.1 If any Subcontractor is entitled under any contract or agreement relating to the Works to relief from force majeure on terms additional to or broader than those specified in this Clause, such additional or broader force majeure events or circumstances shall not excuse the Contractor's nonperformance or entitle him to relief under this Clause.
66.Optional Termination, Payment and Release	66.1 If the execution of substantially all the Works in progress is prevented for a continuous period of 90 days by reason of Force Majeure of which notice has been given under GCC 62, or for multiple periods which total more than 150 days due to the same notified Force Majeure, then either Party may give to the other Party a notice of termination of the Contract. In this event, the termination shall take effect 7 days after the notice is given, and the Contractor shall proceed in accordance with GCC 72.5.
	66.2 Upon such termination, the Project Manager shall determine the value of the work done and issue a Payment Certificate, which shall include (a) the amounts payable for any work carried out for which a price is stated in the Contract; (b) the Cost of Plant and Materials ordered for the Works which have been delivered to the Contractor, or of which the Contractor is liable to accept

	delivery: this Plant and Materials shall become the property of (and be at the risk of) the Employer when paid for by the Employer, and the Contractor shall place the same at the Employer's disposal; (c) other Costs or liabilities which in the circumstances were reasonably and necessarily incurred by the Contractor in the expectation of completing the Works; (d) the Cost of removal of Temporary Works and Contractor's Equipment from the Site and the return of these items to the Contractor's works in his country (or to any other destination at no greater cost); and (e) the Cost of repatriation of the Contractor's staff and labor employed wholly in connection with the Works at the date of termination.
67. Release from Performance	67.1 Notwithstanding any other provision of this Clause, if any event or circumstance outside the control of the Parties (including, but not limited to, Force Majeure) arises, which makes it impossible or unlawful for either or both Parties to fulfill its or their contractual obligations or which, under the law governing the Contract, entitles the Parties to be released from further performance of the Contract, then upon notice by either Party to the other Party of such event or circumstance, (a) the Parties shall be discharged from further performance, without prejudice to the rights of either Party in respect of any previous breach of the Contract; and (b) the sum payable by the Employer to the Contractor shall be the same as would have been payable under GCC 66 if the Contract had been terminated under GCC 66.
G. Finishing the Contract	
68. Completion	68.1 The Contractor shall request the Project Manager to issue a certificate of Completion of the Works, and the Project Manager shall do so upon deciding that the work is completed.
	68.2 In addition to the other provisions, before acceptance of the completed works, Employer shall verify and assure that such works are within the set objective, quality and appropriate to operate and use.
69. Taking Over	69.1 In the contractor's Opinion, if the works are complete and ready for taking over, the contractor may apply by notice to the Project Manager for a Taking-Over Certificate. If the Works are divided into Sections, the Contractor may similarly apply for a Taking-Over Certificate for each Section.

	69.2 The Project Manager shall, within 30 days after receiving the Contractor's application: (a) issue the Taking-Over Certificate to the Contractor if physical progress of works is at least ninety (90) percent in accordance with the Contract except for any minor outstanding work and defects (as listed in the Taking-Over Certificate) which will not substantially affect the use of the Works or Section for their intended purpose (either until or whilst this work is completed and these defects are remedied); or (b) reject the application, giving reasons and specifying the work required to be done by the Contractor to enable the Taking-Over Certificate to be issued. The Contractor shall then complete this work before issuing a further notice under this Sub-Clause.
	69.3 If the Engineer fails either to issue the Taking-Over Certificate or to reject the Contractor's application within the period of 30 days, and if the Works or Section (as the case may be) are substantially completed in accordance with the Contract, the Taking-Over Certificate shall be deemed to have been issued on the last day of that period.
70. Final Account	70.1 The Contractor shall supply the Project Manager with a detailed account of the total amount that the Contractor considers payable under the Contract before the end of the Defects Liability Period. The Project Manager shall issue a Defects Liability Certificate and certify any final payment that is due to the Contractor within 60 days of receiving the Contractor's account if it is correct and complete. If it is not, the Project Manager shall issue within 60 days a schedule that states the scope of the corrections or additions that are necessary. If the Final Account is still unsatisfactory after it has been resubmitted, the Project Manager shall decide on the amount payable to the Contractor and issue a payment certificate.
71. Operating and Maintenance Manuals	71.1 If "as built" Drawings and/or operating and maintenance manuals are required, the Contractor shall supply them by the **dates stated in the SCC**.
	71.2 If the Contractor does not supply the Drawings and/or manuals by the dates **stated in the SCC** pursuant to **GCC 71.1,** or they do not receive the Project Manager's approval, the Project Manager shall withhold the amount **stated in the SCC** from payments due to the Contractor.
72. Termination	72.1 The Employer may terminate the Contract at any time if the contractor; a. does not commence the work as per the Contract, b. abandons the work without completing, c. fails to achieve progress as per the Contract.
	72.2 The Employer or the Contractor may terminate the Contract if the other party causes a fundamental breach of the Contract.
	72.3 Fundamental breaches of Contract shall include, but shall not be limited to, the

	following: a) the Contractor uses the advance payment for matters other than the contractual obligations, b) the Contractor stops work for 30 days when no stoppage of work is shown on the current Program and the stoppage has not been authorized by the Project Manager; c) the Project Manager instructs the Contractor to delay the progress of the Works, and the instruction is not withdrawn within 30 days; d) the Employer or the Contractor is made bankrupt or goes into liquidation other than for a reconstruction or amalgamation. e) a payment certified by the Project Manager is not paid by the Employer to the Contractor within 90 days of the date of the Project Manager's certificate; f) the Project Manager gives Notice that failure to correct a particular Defect is a fundamental breach of Contract and the Contractor fails to correct it within a reasonable period of time determined by the Project Manager; g) the Project Manager gives two consecutive Notices to update the Program and accelerate the works to ensure compliance with GCC Sub clause 22.1 and the Contractor fails to update the Program and demonstrate acceleration of the works within a reasonable period of time determined by the Project Manager; h) the Contractor does not maintain a Security, which is required; i) the Contractor has delayed the completion of the Works by the number of days for which the maximum amount of liquidated damages can be paid, **as defined in the SCC**; and j) If the Contractor, in the judgment of the Employer has engaged in corrupt or fraudulent practices in competing for or in executing the Contract, pursuant to GCC 73.1. k) The Contractor fails to submit Performance Security, Advanced Payment Guarantee (if any) and Insurance Policy documents with extended validity within the time prescribed pursuant to GCC 35.3.
	72.4 When either party to the Contract gives notice of a breach of Contract to the Project Manager for a cause other than those listed under GCC 72.3 above, the Project Manager shall decide whether the breach is fundamental or not.
	72.5 Notwithstanding the above, the Employer may terminate the Contract for convenience.

	72.5 Notwithstanding the above, the Employer may terminate the Contract for convenience. 72.6 If the Contract is terminated, the Contractor shall stop work immediately, make the Site safe and secure, and leave the Site as soon as reasonably possible.
73.Fraud and Corruption	73.1 If the Employer determines that the Contractor has engaged in corrupt, fraudulent, collusive, coercive or obstructive practices, in competing for or in executing the Contract, then the Employer may, after giving 15 days' notice to the Contractor, terminate the Contractor's employment under the Contract and expel him from the Site.
	73.2 Should any employee of the Contractor be determined to have engaged in corrupt, fraudulent, collusive, coercive, or obstructive practice during the execution of the Works, then that employee shall be removed in accordance with GCC Clause 15. For the purposes of this GCC 73; (i) "corrupt practice" is the offering, giving, receiving or soliciting, directly or indirectly, of anything of value to influence improperly the actions of another party. (ii) "fraudulent practice"[5] is any act or omission, including a misrepresentation, that knowingly or recklessly misleads, or attempts to mislead, a party to obtain a financial or other benefit or to avoid an obligation; (iii) "collusive practice"[6] is an arrangement between two or more parties designed to achieve an improper purpose, including to influence improperly the actions of another party; (iv) "coercive practice"[7] is impairing or harming, or threatening to impair or harm, directly or indirectly, any party or the property of the party to influence improperly the actions of a party; (v) "obstructive practice" is (aa) deliberately destroying, falsifying, altering or concealing of evidence material to the investigation or making false statements to investigators in order to materially impede a investigation into allegations of a corrupt, fraudulent, coercive or collusive practice; and/or threatening, harassing or intimidating any party to prevent it from disclosing its knowledge of matters relevant to the investigation or from pursuing the investigation; or (bb) acts intended to materially impede the exercise of the GON's/DP's inspection and audit rights provided for under GCC28.3.
	73.3 The contractor shall be prosecuted for offenses under prevailing criminal laws, if the contractor: (i) Misuses the Advance Payment or payments received from the Employer;

	(ii) Receives payment by submitting false information or documents; (iii) Abandons the works before completion; (iv) Commits a serious violation of the contract; or (v) Causes loss or damage to the Employer.
74. Black Listing	74.1 Without prejudice to any other rights of the Employer under this Contract, GoN, Public Procurement Monitoring Office (PPMO), on the recommendation of procuring entity, may blacklist a Bidder or contractor for its conduct for a period of one (1) to three (3) years on the following grounds and seriousness of the act committed by the bidder or contractor: (a) if it is established that the Contractor has committed substantial defect in implementation of the contract or has not substantially fulfilled its obligations under the contract or the completed work is not of the specified quality as per the contract. (b) If convicted from a court of law in a criminal offense liable to be disqualified for taking part in procurement contract, (c) If it is established that the Contractor has engaged in corrupt or fraudulent practices in competing for or in executing the Contract.
75. Payment upon Termination	75.1 If the Contract is terminated because of a fundamental breach of Contract by the Contractor, the Project Manager shall issue a certificate for the value of the work done and Materials ordered less advance payments received up to the date of the issue of the certificate. Additional Liquidated Damages shall not apply. If the total amount due to the Employer exceeds any payment due to the Contractor, the difference shall be a debt payable to the Employer.
	75.2 If the Contract is terminated for the Employer's convenience or because of a fundamental breach of Contract by the Employer, the Project Manager shall issue a certificate for the value of the work done, Materials ordered, the reasonable cost of removal of Equipment, repatriation of the Contractor's personnel employed solely on the Works, and the Contractor's costs of protecting and securing the Works, and less advance payments received up to the date of the certificate.
	75.3 If the Contract is terminated because of fundamental breach of Contract or for any other fault by the Contractor, the Employer may: (a) withhold further payments to the Contractor until the costs of design, execution, completion and remedying of any defects, liquidated damages (if any), and all other costs incurred by the Employer, have been established, and/or (b) recover from the Contractor any losses and damages incurred by the Employer and any extra costs of completing the Works, after allowing for any sum due to the Contractor, as Government dues. After recovering any such losses, damages and extra costs, the Employer shall pay any balance to the Contractor. (c) forfeit the Performance Security. If the total amount due to the Employer exceeds any payment due to the

	Contractor, the difference shall be a debt payable to the Employer.
76. Property	76.1 All Materials on the Site, Plant, Equipment, Temporary Works, and Works shall be deemed to be the property of the Employer if the Contract is terminated because of the Contractor's default.
77.Release from Performance	77.1 If the Contract is frustrated by the outbreak of war or by any other event entirely outside the control of either the Employer or the Contractor, the Project Manager shall certify that the Contract has been frustrated. The Contractor shall make the Site safe and stop work as quickly as possible after receiving this certificate and shall be paid for all work carried out before receiving it and for any work carried out afterwards to which a commitment was made.
78. Suspension of DP Loan/Credit/ Grant	78.1 In the event that the DP suspends the loan/ credit/grant to the Employer from which part of the payments to the Contractor are being made: a. the Employer is obligated to notify the Contractor of such suspension within 7 days of having received the DP's suspension notice; and b. if the Contractor has not received sums due him within the 30 days for payment provided for in GCC 49.1, the Contractor may immediately issue a 15-day termination notice.
79. Eligibility	79.1 The Contractor shall have the nationality of an eligible country as specified in Section V of the bidding document. The Contractor shall be deemed to have the nationality of a country if the Contractor is a citizen or is constituted, or incorporated, and operates in conformity with the provisions of the laws of that country. This criterion shall also apply to the determination of the nationality of proposed subcontractors or suppliers for any part of the Contract including related services.
	79.2 The materials, equipment, and services to be supplied under the Contract shall have their origin in eligible source countries **as specified in SCC** and all expenditures under the Contract will be limited to such materials, equipment, and services. At the Employer's request, the Contractor may be required to provide evidence of the origin of materials, equipment, and services.
	79.3 For purposes of GCC 79.2, "origin" means the place where the materials and equipment are mined, grown, produced, or manufactured, and from which the services are provided. Materials and equipment are produced when, through manufacturing, processing, or substantial or major assembling of components, a commercially recognized product results that differs substantially in its basic characteristics or in purpose or utility from its components.
80.ProjectManager's Duties and Authorities	80.1 The Project Manager's duties and authorities are restricted to the extent as **stated in the SCC**.

81.Quarries and Spoil Dumps	81.1 Any quarry operated as part of this Contract shall be maintained and left in a stable condition without steep slopes and be either refilled or drained and be landscaped by appropriate planting. Rock or gravel taken from a river shall be removed over some distance so as to limit the depth of material removed at any one location, not disrupt the river flow or damage or undermine the river banks. The Contractor shall not deposit excavated material on land in Government or private ownership except as directed by the Project Manager in writing or by permission in writing of the authority responsible for such land in Government ownership, or of the owner or responsible representative of the owner of such land in private ownership, and only then in those places and under such conditions as the authority, owner or responsible representative may prescribe.
82. Local Taxation	82.1 The prices bid by the Contractor shall include all taxes that may be levied in accordance to the laws and regulations in being in Nepal on the date 30 days prior to the closing date for submissions of Bids on the Contractor's equipment, plant and materials acquired for the purpose of the Contract and on the services performed under the Contract. Nothing in the Contract shall relieve the Contractor from his responsibility to pay any tax that may be levied in Nepal on profits made by him in respect of the Contract.
83. Value Added Tax	83.1 The Contract is not exempted from value added tax. An amount specified in the schedule of taxes shall be paid by the Contractor in the concerned VAT office within time frame specified in VAT regulation.
84. Income Taxes on Staff	84.1 The Contractor's staff, personnel and labor will be liable to pay personal income taxes in Nepal in respect of their salaries and wages, as are chargeable under the laws and regulations for the time being in force, and the Contractor shall perform such duties in regard to such deductions as may be imposed on him by such laws and regulations.
	84.2 The issue of the Final Account Certificate pursuant to clause GCC 70 shall be made only upon submittal by the Contractor of a certificate of income tax clearance from the Government of Nepal.
85. Duties, Taxes and Royalties	85.1 Any element of royalty, duty or tax in the price of any goods including fuel oil, and lubricating oil, cement, timber, iron and iron goods locally procured by the Contractor for the works shall be included in the Contract rates and prices and no reimbursement or payment in that respect shall be made to the Contractor.
	85.2 The Contractor shall familiarize himself with GON the rules and regulations with regard to customs, duties, taxes, clearing of goods and equipment, immigration and the like, and it will be necessary for him to follow the required procedures regardless of the assistance as may be provided by the Employer wherever possible.
	85.3 The Contractor shall pay and shall not be entitled to the reimbursement of cost of extracting construction materials such as sand, stone/boulder, gravel, etc. from the

	river beds or quarries. Such prices will be levied by the concerned Local Government (LG) as may be in force at the time. The Contractor, sub-contractor(s) employed directly by him and for whom he is responsible, will not be exempted from payment of royalties, taxes or other kinds of surcharges on these construction materials so extracted and paid for to the concerned Local Government (LG)
86. Member of Government , etc, not Personally Liable	86.1 No member or officer of GoN or the Employer or the Project Manager or any of their respective employees shall be in any way personally bound or liable for the act or obligations of the Employer under the Contract or answerable for any default or omission in the observance or performance of any of act, matter or thing which are herein contained.
87. Approval of Use of Explosives	87.1 No explosives of any kind shall be used by the Contractor without the prior consent of the Employer in writing and the Contractor shall provide, store and handle these and all other items of every kind whatsoever required for blasting operations, all at his own expense in a manner approved in writing by the Employer.
88 Compliance with Regulations for Explosives	88.1 The Contractor shall comply with all relevant ordinances, instructions and regulations which the Government, or other person or persons having due authority, may issue from time to time regarding the handling, transportation, storage and use of explosives.
89. Permission for Blasting	89.1 The Contractor shall at all times maintain full liaison with and inform well in advance, and obtain such permission as is required from all Government authorities, public bodies and private parties whatsoever concerned or affected, or likely to be concerned or affected by blasting operation.
90.Records of Explosives	90.1 Before the beginning of the Defects Liability Period, the Contractor shall account to the satisfaction of the Project Manager for all explosives brought on to the Site during the execution of the Contract and the Contractor shall remove all unused explosives from the Site on completion of works when ordered by the Project Manager.
91. Traffic Diversion	91.1 The Contractor shall include the necessary safety procedures regarding and pedestrian traffic diversion that is needed in execution of the works. The Contractor shall include in his costing of works, any temporary works or diversion that are needed during the construction period. All traffic diversion should be designed for the safety of both the motoring public and the men at work. It shall ensure the uninterrupted flow of traffic and minimum inconvenience to the public during the period concerned. As such, adequate warning signs, flagmen and other relevant safety precautionary measures shall be provided to warn motorists and pedestrians well ahead of the intended diversion as directed by the Project Manager. All traffic devices used shall be designed in accordance with the

	instruction of Project Manager.
92. Social Security Fund	92.1 The contractor shall enroll the laborers, employees, or other workforce engaged in such work in the Social Security Fund in accordance with prevailing laws. 92.2 The contractor shall be responsible to disburse the remuneration, benefits, and other payments of the laborers, employees, or workforce into the bank account of the concerned individual. 92.3 The contractor shall be responsible for ensuring that the required work permit has been obtained in accordance with prevailing laws in respect of foreign personnel.

Section VIII: Special Conditions of Contract

The following Special Conditions of Contract shall supplement the GCC. Whenever there is a conflict, the provisions herein shall prevail over those in the GCC.

Sunil Smriti Rural Municipality

Office of Rural Municipal Executive, Sulichaur, Rolpa

Building Construction of Secondary School (Ward No.05)

Contract Identification No:- SSRM-ROL-W-NCB-03-2083/084

Special Conditions of Contract

A. General	
GCC 1.1 (p)	The Employer is: Sunil Smriti Rural Municipality, Office of Rural Municipal Executive,Sulichaur, Rolpa
GCC 1.1 (u)	The Intended Completion Date for the whole of the Works shall be 1**4-06-2027**
GCC 1.1(bb) & GCC 10.1	The Project Manager is Chief Administrative Officer The Project Manager and Engineer are synonyms.
GCC 1.1 (ee)	The Site is located at **Sunil Smriti Rural Municipality ward No 5 ,Rolpa**
GCC 1.1 (hh)	**The Start Date shall be after signing contract.**
GCC 1.1 (ll)	The Works consist of **Building Construction of Secondary School (Ward No.05)**
GCC 2.2	Sectional Completions are: **N/A**
GCC 2.3 (i)	The following documents also form part of the Contract: N/A
GCC 3.1	The language of the contract is **ENGLISH/NEPALI** The law that applies to the Contract is the law of NEPAL
GCC 11.1	The Project Manager **may** delegate any of his duties and responsibilities.
GCC 12.1 (a)	The agreed electronic transmission shall be: **N/A**
GCC 14.1	Schedule of other contractors: **N/A**
GCC 19.1	The minimum insurance amounts and deductibles shall be: 1. The minimum cover for loss of or damage to the Works, Plant and Materials is: **115 %** of the Contract Amount. 2. The maximum deductible for insurance of the Works and of Plant and Materials is: **as per the provision of Nepal Insurance Authority].** 3. The minimum cover for loss or damage to immovable Equipment/plants is : **100% (i.e Replacement Cost)** 4. The maximum deductible for insurance of immovable Equipment/plant is:**as per the provision of Nepal Insurance Authority.** 5. The minimum cover for loss of or damage to other property is: **100000** with unlimited number of occurrences

	6. The maximum deductible for insurance of other property is: **as per the provision of Nepal Insurance Authority .** 7. The minimum cover for personal injury or death insurance i. for the Contractor's employees is that specified in the Labor act of Nepal and ii. for other people is : is between NRS 0.7 to 1 million with an unlimited number of occurrences
GCC 20.1	Site Investigation Reports are: **N/A**
GCC 23.1	The following shall be designed by the Contractor: **N/A**
GCC 24.2	**N/A**
GCC 26.1	The Site Possession Date(s) shall be: **Within 1 week of contract aggrement**
GCC 30.1	The place of arbitration shall be: **NEPCA.**
C. Time Control	
GCC 34.1	The Contractor shall submit for approval a Program for the Works within 15 days from the date of the Letter of Acceptance.
GCC 34.3	The period between Program updates is 30 days. The amount to be withheld for late submission of an updated Program is 5**0000 NPR**
D. Quality Control	
GCC 42.1	The Defects Liability Period is: **365** days.
E. Cost Control	
GCC 49.1	**Prevailing interest rate as per Nepal Rastra Bank.**
GCC 53.1	The Contract **is not** subject to price adjustment .
GCC 53.6	Base Price of Construction Materials applicable for price adjustment shall be as per the Table of Adjustment Data submitted by Bidder together with the Letter of Price Bid which is approved by the Project manager and attached as Annex-1.
GCC 53.7	The Price Adjustment amount shall be limited to a maximum of : ***N/A*** percentage of initial contract amount(without VAT but including PS)
GCC 54.1	The proportion of payments retained is: 5 (five) percent.
GCC 55.1	The liquidated damages for the whole of the Works are 0.05 Percent of the final Contract Price

	(without VAT but including PS) per day. The maximum amount of liquidated damages for the whole of the Works is 10 Percent of the final Contract Price (without VAT but including PS).
GCC 56.1	The provision of bonus ***Not Applicable*** in contract.
GCC 57.1	The provision of Advance Payments **"Applicable** in the contract.The Advance Payments shall be: **20% percent of initial contract amount (without VAT but including PS)]** and shall be paid in two equal installments and to the Contractor.
GCC 57.3	Deductions from Payment Certificates will commence in the first certificate in which the value of works executed exceeds 30% of the Contract Price. Deduction will be at the rate of ***[Insert percentage]***[9] of the respective Monthly Interim Payment Certificate until such time as the advance payment has been repaid; provided that the advance payment shall be completely repaid prior to the end of 80 % of the approved contract price.
GCC 57.4	Recover interest on the advance amount from the Contractor should be at a rate of **10 %**.
GCC 58.1	The Performance Security amount is: **based on ITB 29.5 and/or ITB 34.1.**
G. Finishing the Contract	
GCC 71.1	The date by which operating and maintenance manuals are required is; 7 days before completion of project.
GCC 71.2	The date by which "as built" drawings are required is: N/A The amount to be withheld for failing to produce "as built" drawings and/or Operating and maintenance manuals is: N/A
GCC 72.3 (i)	The maximum number of days is: **200**
GCC 79.2	For GoN funded: For the purpose of Country of Origin: "all Countries"
GCC 80	The Project Manager has to obtain the specific approval of the Employer for taking any of the following actions : a. Approving subcontracting of any part of the works under General Conditions of Contract Clause 13; b. Certifying additional costs determined under General Conditions of Contract Clause 50; c. Determining start date under General Conditions of Contract Clause 1; d. Determining the extension of the intended Completion Date under General Conditions of Contract Clause 35; e. Issuing a Variation under General Conditions of Contract Clause 1 and 46, except in an emergency situation, as reasonably determined by the Project Manager; emergency situation may be defined as the situation when protective measures must be taken for the

[9] ***[% of advance payment × 100/(80-30)]***

	safety of life or of the works or of adjoining property. f. Adjustment of rates under General Conditions of Contract Clause 45;

Section IX: Contract Forms

This Section contains forms which, once completed, will form part of the Contract. The forms for Performance Security and when required Advance Payment Security and Retention Money Security, shall only be completed by the successful Bidder after contract award.

Letter of Intent

[on letterhead paper of the Employer]

Date: ... ……

To: .....***Name and address of the Contractor***.....

Subject: …… Issuance of letter of intent to award the contract.....

This is to notify you that, it is our intention to award the contract ... .***[insert date]*** .....for execution of the ... .***[insert name of the contract and identification number, as given in the Contract BDS/SCC]*** to you as your bid price ***Nepalese Rupees*** ..... ***[insert amount of contract price in figures and words including taxes]*** as corrected and modified in accordance with the Instructions to Bidders is hereby selected as substantially responsive evaluated bid closest to the Average Bid Price.

Authorized Signature: ……

Name: ... …….

Title: …….

CC:
[Insert name and address of all other Bidders, who submitted the bid]

[Notes on Letter of Intent
The issuance of Letter of Intent is the information of the selection of the bid of the successful bidder by the Employer and for providing information to other unsuccessful bidders who participated in the bid as regards to the outcome of the procurement process. This standard form of Letter of Intent to Award should be filled in and sent to the successful Bidder only after evaluation and selection of substantially responsible evaluated bid closest to the Average Bid Price.]

Letter of Acceptance

[on letterhead paper of the Employer]

Date: ……..

To: ……*Name and address of the Contractor*……...

Subject: ……*Notification of Award*

This is to notify that your Bid for the Invitation of Bids dated **.....*[Insert date of bid invitation]*** ……..for execution of the……..***[Insert name of the contract and identification number, as given in the Contract BDS/SCC]*** ……... for the Contract price of Nepalese Rupees ***[insert amount in figures and words including taxes],*** as corrected in accordance with the Instructions to Bidders is hereby accepted in accordance with the Instruction to Bidders.

You are hereby instructed to contact this office to sign the formal contract agreement within 15 days with Performance Security of **NRs**. ……. in accordance with the Conditions of Contract, using for that purpose the Performance security Form included in Section X (Contract Forms) of this Bidding Document.

Authorized Signature: ……...

Name and Title of Signatory: ……

Contract Agreement

THIS AGREEMENT made the .....day of…..between……. name of the Employer ***……(hereinafter "the Employer"),*** of the one part, and ……name of the Contractor ……(hereinafter "the Contractor"), of the other part:

WHEREAS the Employer desires that the Works known as ……... name of the Contract .....should be executed by the Contractor, and has accepted a Bid by the Contractor for the execution and completion of these Works and the remedying of any defects in the sum of NRs ***….....…..[insert amount of contract price in words and figures including taxes]***(hereinafter "the Contract Price").

The Employer and the Contractor agree as follows:

1. In this Agreement words and expressions shall have the same meanings as are respectively assigned to them in the Contract documents referred to.

2. The following documents shall be deemed to form and be read and construed as part of this Agreement. This Agreement shall prevail over all other Contract documents.
   (a) the Letter of Acceptance;
   (b) the Letter of Bid;
   (c) the Addenda Nos ..... ***[Insert addenda numbers if any]***
   (d) the Special Conditions of Contract;
   (e) the List of Eligible Countries as per GCC,
   (f) the General Conditions of Contract;
   (g) the Specification;
   (h) the Drawings;
   (i) Bill of Quantities (or Schedules of Prices for lump sum contracts), and
   (j) Table of Price Adjustment Data
   (k) List of Approved Subcontractors
   (l) .....***[Specify if there are any other document]***

3. In consideration of the payments to be made by the Employer to the Contractor as indicated in this Agreement, the Contractor hereby covenants with the Employer to execute the Works and to remedy defects therein in conformity in all respects with the provisions of the Contract.

4. The Employer hereby covenants to pay the Contractor in consideration of the execution and completion of the Works and the remedying of defects therein, the Contract Price or such other sum as may become payable under the provisions of the Contract at the times and in the manner prescribed by the Contract.

IN WITNESS whereof the parties hereto have caused this Agreement to be executed in accordance with the laws of Nepal on the day, month and year indicated above.

Signed by …….
for and on behalf the Contractor in the presence of
Witness, Name, Signature, Address, Date

Signed by……..
for and on behalf of the Employer in the presence of
Witness, Name, Signature, Address, Date

Witness, Name Signature, Address, Date List of Approved Subcontractors

In accordance with GCC Sub-Clause 13.1, The following Subcontractors are approved for carrying out the work as specified below.

Name of Subcontractors	Description of Works	Value/Percentage of subcontract

Performance Security

(On letterhead paper of the Bank)

..... ***Bank's Name, and Address of Issuing Branch or Office*** .....

Beneficiary: ..... ***[Insert Name and Address of Employer]*** …….....
Date: .....

Performance Guarantee No.:…….

We have been informed that ... ... ***[insert name of the Contractor, which in the case of a joint venture shall be the name of the joint venture]*** (hereinafter called "the Contractor") has been notified by you to sign the Contract No. …….. ***[insert reference number of the Contract]*** for the execution of …….. ***[insert name of contract and brief description of Works]*** (hereinafter called "the Contract").

Furthermore, we understand that, according to the conditions of the Contract, a performance guarantee is required.

At the request of the Contractor, we..... ***[insert name of the Bank]*** hereby irrevocably undertake to pay you any sum or sums not exceeding in total an amount of Nepalese Rupees .....***[insert amount in figures* and amount in words)*** such sum being payable in Nepalese Rupees, upon receipt by us of your first demand in writing accompanied by a written statement stating that the Contractor is in breach of its obligation(s) under the Contract, without your needing to prove or to show grounds for your demand or the sum specified therein.

This guarantee shall expire, no later than the……***[insert day]***……..Day of ……***[insert month, year]***…… **, and any demand for payment under it must be received by us at this office on or before that date.

This guarantee is subject to the Uniform Rules for Demand Guarantees (URDG), 2010 Revisions,, ICC Publication No. 758 , .except that the supporting statement under Article 15(a) is hereby excluded..

……

Seal of Bank and Signature(s)

Note:
All italicized text is for guidance on how to prepare this demand guarantee and shall be deleted from the final document.

* *The Guarantor shall insert an amount representing the percentage of the Contract Price specified in the Contract in Nepalese Rupees.*

*** Insert the date thirty days after the date specified for the Defect Liability Period. The Employer should note that in the event of an extension of the time for completion of the Contract, the Employer would need to request an extension of this guarantee from the Guarantor. Such request must be in writing and must be made prior to the expiration date established in the guarantee.*

Advance Payment Security

(On letterhead paper of the Bank)

…….. Bank's Name, and Address of Issuing Branch or Office.....

Beneficiary: ……***[Insert Name and address of employer]***

Date : ……

Advance Payment Guarantee No……..

We have been informed that **……** ***[insert name of the Contractor, which in the case of a joint venture shall be the name of the joint venture]*** (hereinafter called "the Contractor") has entered into Contract No. ..... ***[insert refrence number of the contract]*** ……dated …… ***[insert agreement date]*** with you, for the execution of ***.....[Insert name of the contract and brief description of Works]*** (hereinafter called "the Contract").

Furthermore, we understand that, according to the Conditions of the Contract, an advance payment in the sum Nepalese Rupees ……. ***[insert amount in figures*and in words]*** is to be made against an advance payment guarantee.

At the request of the Contractor, we..... ***[insert name of the Bank]*** hereby irrevocably undertake to pay you any sum or sums not exceeding in total an amount of Nepalese Rupees ……***[insert*** amount in figures***. =and amount in words]*** upon receipt by us of your first demand in writing accompanied by a written statement stating that the Contractor is in breach of its obligation under the Contract because the Contractor:

(a) Used the advance payment for purposes other than the costs of mobilization in respect of the Works. Or

(b) .Has failed to repay the advance payment when it has become due and payable in accordance with the conditions of the contract, specifying the amount payable by the contractor.

The maximum amount of this guarantee shall be progressively reduced by the amount of the advance payment repaid by the Contractor as indicated in copies of interim statements or payment certificates which shall be presented to us. This guarantee shall expire, at the latest, upon our receipt of a copy of the interim payment certificate indicating that eighty (80) percent of the Contract Price has been certified for payment, or on the .. ***[insert day]***..... day of ... ***[insert month, year]***...**, whichever is earlier. Consequently, any demand for payment under this guarantee must be received by us at this office on or before that date.

This guarantee is subject to the Uniform Rules for Demand Guarantees (URDG), 2010 Revisions,, ICC Publication No. 758 , except that the supporting statement under Article 15(a) is hereby excluded..

……

Seal of Bank and Signature(s)

Note:

All italicized text is for guidance on how to prepare this demand guarantee and shall be deleted from the final document.

**The Guarantor shall insert an amount representing the amount of the advance payment in Nepalese Rupees of the advance payment as specified in the Contract.*

*** Insert the date Thirty days after the expected completion date. The Employer should note that in the event of an extension of the time for completion of the Contract, the Employer would need to request an extension of this guarantee from the Guarantor. Such request must be in writing and must be made prior to the expiration date established in the guarantee.*

Retention Money Security

(On letterhead paper of the Bank)

..... ***Bank's Name, and Address of Issuing Branch or Office***.....

Beneficiary: _____ ***[Insert name and Address of Employer]***

Date: _____***[Insert date of issue]***

RETENTION MONEY GUARANTEE No.: ***[Insert guarantee reference number]***

We have been informed that _____ ***[insert name of Contractor, which in the case of a joint venture shall be the name of the joint venture]*** (hereinafter called "the Contractor") has entered into Contract No. _____ ***[insert reference number of the contract]*** dated _____ with the Beneficiary, for the execution of _____ ***[insert name of contract and brief description of*** **Works*]*** (hereinafter called "the Contract").

Furthermore, we understand that, according to the conditions of the Contract, the Beneficiary retains moneys up to the limit set forth in the Contract ("the Retention Money"), and that when at least eighty (80) percent of the whole works have been completed, progress of the works is satisfactory in accordance with the Contract as per approved work schedule and it can be assured that the works can be completed at the intended completion date, payment of ***[insert the amount of the Retention Money]*** is to be made against a Retention Money guarantee.

At the request of the Contractor, we, .. . ***[insert name of the Bank]*** ……., as Guarantor, hereby irrevocably undertake to pay the Beneficiary any sum or sums not exceeding in total an amount of Nepalese Rupees _____ ***[insert amount in figures andamount in words]***[1] upon receipt by us of the Beneficiary's complying demand supported by the Beneficiary's statement, whether in the demand itself or in a separate signed document accompanying or identifying the demand, stating that the Contractor is in breach of its obligation(s) under the Contract, without your needing to prove or show grounds for your demand or the sum specified therein.

This guarantee shall expire no later than the …***[insert day]***... day of ……***[insert month, year***… [2], and any demand for payment under it must be received by us at the office indicated above on or before that date.

This guarantee is subject to the Uniform Rules for Demand Guarantees (URDG), 2010 Revisions,, ICC Publication

---

Note: All italicized text (including footnotes) is for use in preparing this form and shall be deleted from the final product.

[1]*The Guarantor shall insert the amount of the Retention Money.*

[2]*Insert the same expiry date which is 30 days more than the end of Defect Liability Period. The Employer should note that in the event of an extension of this date for completion of the Contract, the Employer would need to request an extension of this guarantee from the Guarantor. Such request must be in writing and must be made prior to the expiration date established in the guarantee.*

No. 758 , except that the supporting statement under Article 15(a) is hereby excluded.

.....

Seal of Bank and Signature(s)

Annex-1

Table of Price Adjustment Data

[GCC 53.1]

Code	Index Description	Source of Index*	Base Value and Date	Employer's Proposed Weighting Range (coefficient)	Bidder's Proposed Weighting (coefficient)**
1	**2**	**3**	**4**	**5**	**6**
	Non - adjustable (A)			0.15	0.15
	Labor (b)				
	Materials (c)				
	…				
	Equipment usage (d)				
		Total			**1.00**

Note: Base value and Bidder's proposed weighting coefficient to be filled as per "Bid Form of Table of Price Adjustment Data" in Bidding Forms (Section-IV) after verification by the Employer in case of the alternative provision of Bidder proposed value and weighting coefficient.

Table of Price Adjustment Data

[GCC 53.6]

Code	Construction Material*	Unit	Base Price (NRs/Unit) ** (Ex-factory)	Source (Factory)**
1	**2**	**3**	**4**	**5**

** For the purpose of calculation of price adjustment, the Ex-factory price of the same source mentioned in the table shall be taken into consideration.

Note: Base Price and source to be filled as per "Bid Form of Table of Price Adjustment Data" in Bidding Forms (Section-IV) after verification by the Employer in case of the alternative provision of Bidder proposed source and base price.

BILL OF QUANTITIES

S.N.	Description Of Work	Unit	Quantity	Unit Rate(NPR)	Amount(NPR)
1. Provisional sum					
	Procurement Item Details				
1	Provide insurance of works, materials, construction equipment and against accidents to work person including third party insurance as per General Conditions of Contract clause and Contract Data.	PS	1	50000.00	50,000.00
2	Providing and installation of Project Signboards with size of 1.8 x 1.2 m as per specification and instruction of Engineer.	PS	1	8000.00	8,000.00
3	Additional Testing of materials and workmanship for concrete mix design, concrete tests, etc	PS	1	50000.00	50,000.00
				Sub Total of A	**108,000.00**
Construction work					
B	**Civil Works**				
	Procurement Item Details				

S.N.	Item Description	Unit	Quantity	Bidder's Rate(NPR)	Bidder's Rate(in words)	Total Amount(NPR)
1	Earthwork in excavation in soft soil using hydraulic excavator including necessary lead and lift as per instruction of site engineer.	Cum	36.67			
2	Earthwork in excavation in hard soil using hydraulic excavator including necessary lead and lift as per instruction of site engineer.	Cum	9.17			
3	Earthwork in excavation for foundation in soft soil manually including necessary lead and lift as per instruction of site engineer.	Cum	19.49			
4	Earthwork in excavation for foundation in hard soil manually including necessary lead and lift as per instruction of site engineer.	Cum	1.53			
5	Earthwork filling in trench of foundation & floor including consolidation in layers of 15 cm and watering with extra soil necessary from outside as per instruction of site engineer.	Cum	3.19			

	Procurement Item Details					
S.N.	Item Description	Unit	Quantity	Bidder's Rate(NPR)	Bidder's Rate(in words)	Total Amount(NPR)
6	Soling stone with approved quality of stone in true line and level including filling of voids by local sand all complete as per drawing, specification.	Cum	10.85			
7	Providing, laying and curing stone masonry works in cement, sand mortar (1:4) finished in perfect lines & level as per specification, drawings & instructions of the site engineer.	Cum	47.63			
8	Providing, laying, compacting and curing plain cement concrete M10 (1:3:6) in foundation with cement, sand and stone ballast 20mm gauge finishing to approved level, lines and dimensions all complete as per drawings, specifications and instruction of the site engineer.	Cum	3.98			
9	Providing and Laying Plain Cement Concrete (P.C.C.) in 1:2:4 in foundation with cement, sand and crosser aggregate including mixing, laying, finishing to approved level, line and dimensions and curing all complete as per specification and instruction of site Engineer.	Cum	4.85			
10	Providing and laying PCC (1:1:2) M25 for RCC work in foundation, column, beam, slab etc. with cement sand and crosser aggregate of required size including mixing with concrete mixture, compacting the concrete with vibrator machine, laying, finishing to approved level, lines and dimension and curing all complete work as per specification and instruction of site Engineer.	Cum	94.51			

	Procurement Item Details					
S.N.	Item Description	Unit	Quantity	Bidder's Rate(NPR)	Bidder's Rate(in words)	Total Amount(NPR)
11	Providing Reinforcement bars (Grade Fe 415 or above) work including straightening, cleaning, cutting, bending, binding with 20 SWG annealed wire & fixing in position as per design drawing, bar bending schedule for raft foundation column, beam, wall, stair, slab in all RCC works as per specification, drawing & instruction of site Engineer. Approved brand : Himal Iron, Panchakanya or Equivalent.	Kg	13528.18			
12	Form Work of RCC work with necessary wood, nails, proping, scaffolding, stagging, support inclusive of wedging and cutting holes for utilization work till the support is full unyielding nett for Column/Beam/Slab etc. Complete works.	Sqm	965.27			
13	Providing and Laying Brick Masonry Work using Good quality chimney made I Class brick in (1:4) C/S mortar above ground floor to approved level, line and dimensions and curing all complete as per specification and instruction of site Engineer.	Cum	48.74			
14	12.5 mm thick Cement sand plaster (1:4)work on Inside & Outside of building wall & floor surfaces of good finish including racking the joints, wetting the surface and curing the work all complete as per specification	Sqm	1551.52			
15	12.50mm. Thick Cement sand plaster (1:3) work on ceiling surface of good finish including racking the joints, wetting the surface and curing the work all complete as per specification.	Sqm	627.99			
16	Two coat weather-proof(Liquid Type)paint work over primer coat of approved colour and shade on Outer plaster surface including cleaning,wetting and scaffolding all complete as per specification and instruction of the site engineer.	Sqm	515.34			

	Procurement Item Details					
S.N.	**Item Description**	**Unit**	**Quantity**	**Bidder's Rate(NPR)**	**Bidder's Rate(in words)**	**Total Amount(NPR)**
17	Providing & painting two coats of Readymade acrylic washable Distemper paint with one coat of cement primer of approved brand and colour over plastered surfaces of building, walls ceiling and passage area as per specifications and instruction of the site engineer.	Sqm	644.16			
18	Supply , mixing , placing ,compacting and curing 3mm cement sand punning (1:1) over screed in panel, trowel finished including ,material, labour, curing at any height completed as per drawing, specification and instructions of the site engineer.	Sqm	1106.13			
19	Providing & laying porcelain glazed floor tiles and Non glazed wall tiles in(1:4) cement sand mortar in perfect lines & level finishing the joint with white cement with or without pigments where necessary all complete as per design drawings	Sqm	213.46			
20	Supply, making and fixing in position of Sal wooden frame in smooth and uniform level including cost of material, labour all complete as drawing, specification & instructions.	Cum	0.19			
21	Supplying and fixing 38 mm thick sal wood fully paneled shutter using 38x75 mm frame work with all complete as per site incharge and speification.	Sqm	16.40			
Sub Total of B						
C	**Sanitary Works:**					
1	Supplying and Fixing White glazed earthenware Indian pattern 530 Orissa Pan with low level Pvc flushing cistern(10ltr),trap,pipe connector with complete accessories including bracket, flushing pipe,pipe connector etc. all complete set. (Hindware, Parryware, Classica, bolan or equivalent.)	Sets	10.00			
2	Supplying and Fixing (50x40)cm Porcelain clay white glaze Oval Wash basin with mixture complete set.	Sets	4.00			
3	Supplying and Fixing C P Towel Rod(1/2"*24") complete as per site incharge and speification.	No.	4.00			

	Procurement Item Details					
S.N.	Item Description	Unit	Quantity	Bidder's Rate(NPR)	Bidder's Rate(in words)	Total Amount(NPR)
4	Supplying and Fixing chrome plate soap dish complete as per site incharge and speification.	No.	4.00			
5	Supplying and Fixing C.P. Toilet Paper Holder complete as per site incharge and speification.	No	10.00			
6	Supplying and Fixing Mirror(18"*24") complete as per site incharge and speification.	No	4.00			
7	Supplying and Fixing CPVC PIPE sdr-11/ mtr and fittings 25mm complete as per site incharge and speification.	Rm	20.00			
8	Supplying and Fixing CPVC PIPE sdr-11/ mtr and fittings 20mm complete as per site incharge and speification.	Rm	30.00			
9	Supplying and Fixing 15mm Stainless Steel Bib Cock complete as per site incharge and speification.	No	10.00			
10	Supplying and Fixing 15mm Stainless Steel Angle valve complete as per site incharge and speification.	No	10.00			
11	Supplying and Fixing PVC Floor Trap 11x7.5cm (4" X 2½") complete as per site incharge and speification.	No	8.00			
12	Supplying and Fixing PVC Pipe and fittings 75 mm dia 6kgf/cm2 complete as per site incharge and speification.	Rm	18.00			
13	Supplying and Fixing PVC Pipe and fittings 110 mm dia 6kgf/cm2 complete as per site incharge and speification.	Rm	24.00			
	Sub Total of C					
D	**Electrical Works:**					

	Procurement Item Details					
S.N.	**Item Description**	**Unit**	**Quantity**	**Bidder's Rate(NPR)**	**Bidder's Rate(in words)**	**Total Amount(NPR)**
1	Supplying the materials and concealed/surface wiring of light points (the point wiring should include light, emergency lights, fan outlet of required length from distribution board via junction box and control devices/switches to a point) using 2 x 2.5 sq mm. pvc insulated copper conductor in a HDP pipe of size 16 mm. dia. as per drawing specifications and instruction.	Point	54.00			
Sub total of D						
Total of Procurement Items						
Sub Total (E)=B+C+D						
VAT @13% of E						
Grand Total with(VAT+ PS)						